PIONEER
The Art of Entertainment

Service Manual

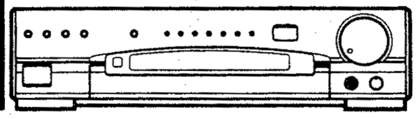

ORDER NO.
ARP2401

TUNER CONTROL AMPLIFIER

CX-J400

CX-J300

CX – J400 AND CX – J300 HAVE THE FOLLOWING :

Type	Model		Power Requirement	Remarks
	CX – J400	CX – J300		
HE	○	○	AC 220 V – 230 V, 240 V(switchable)*	
HEWZI	○	○	AC 220 V – 230 V, 240 V(switchable)*	
HB	○	○	AC 220 V – 230 V, 240 V(switchable)*	
SD 2	–	○	AC 110 V, 120 V – 127 V, 220 V, 240 V(switchable)	
YPW 2	–	○	AC 240 V only	

* Change the connection of the power transformer's primary wiring.

- This manual is applicable to the following : CX – J400/HE and HB ; CX – J300/HE and HB.
- As to the following : CX – J400/HB ; CX – J300/HE and HB, refer to page 35.
- As to the other type(s), refer to applicable service manual(s).
- These products are systems components. Each of these products does not function properly when independent ; to avoid malfunctions, be sure to connect it to the prescribed system component(s), otherwise damage may result.
- These products' instructions are contained within the operating instructions manual of the related system component(s).
- The manual is packed with those component(s). These products' accessories etc. are packed with their related component(s).
- Ce manuel pour le service comprend les explications de réglage en francais.
- Este manual de servicio trata del método ajuste escrito en español.

CONTENTS

1. EXPLODED VIEWS AND PARTS LIST ······ 2
2. PCB PARTS LIST ······ 5
3. PANEL FACILITIES ······ 8
4. SPECIFICATIONS ······ 10
5. SCHEMATIC DIAGRAMS AND PCB CONNECTIONS DIAGRAMS ······ 11
6. ADJUSTMENTS ······ 29
6. REGLAGE ······ 30
6. AJUSTE ······ 31
7. FOR CX – J400/HB ; CX – J300/HE AND HB ······ 35

PIONEER ELECTRONIC CORPORATION 4-1, Meguro 1-Chome, Meguro-ku, Tokyo 153, Japan
PIONEER ELECTRONICS SERVICE INC. P.O. Box 1760, Long Beach, California 90801 U.S.A.
PIONEER ELECTRONICS OF CANADA, INC. 505 Cochrane Drive, Markham, Ontario L3R 8E3 Canada
PIONEER ELECTRONIC [EUROPE] N.V. Haven 1087 Keetberglaan 1, 9120 Melsele, Belgium
PIONEER ELECTRONICS AUSTRALIA PTY. LTD. 178-184 Boundary Road, Braeside, Victoria 3195, Australia TEL: [03] 580-9911

© PIONEER ELECTRONIC CORPORATION 1992

FS JAN. 1992 Printed in Japan

1. EXPLODED VIEWS AND PARTS LIST

NOTES :

- *The parts with an encircled number are generally unavailable because they are not in our Master Spare Parts List.*
- *The ⚠ mark found on some component parts indicates the importance of the safety factor of the part. Therefore, when replacing, be sure to use parts of identical designation.*
- *Parts marked by "◉" are not always kept in stock. Their delivery time may be longer than usual or they may be unavailable.*

Mark	No.	Description	Parts No.
	1	VOL KNOB	AAB1259
	2	BAND BUTTON	AAD2100
	3	FUNCTION BUTTON	AAD2102
	4	POWER BUTTON	AAD2104
	5	TIMER BUTTON	AAD2105
	6	INTERNAL PANEL	AAK2221
	7	INDICATOR LENS	AAK2222
	8	PANEL	AAK2223
	9	SCREW	ABA-298
	10	SCREW (STEEL)	ABA1009
	11	SCREW (STEEL)	ABA1011
	12	SCREW	ABA1018
	13	SCREW (STEEL)	ABA1143
⚠	14	AC POWER CORD	ADG1019
	15	BINDER	AEC-826
⚠	16	STRAIN RELIEF	AEC-882
	17	PCB SUPPORT	AEC1010
	18	PCB SPACER	AEC1100
	19	NYLON RIVET	AEC1160
	20	SPACER	AEC1236
	21	BINDER	AEP-215
	22	TERMINAL SCREW	AKE-031
⚠	23	AC SOCKET 1-P	AKP-508
⚠	24	FUSE HOLDER	AKR-038
	25	FRONT PANEL	AMB1899
	26	PCB MOLD	AMR1525
	27	LEG ASSY(S)	AMR1937
	28	SEALING DOOR ASSY	AMR2338
	29	CHASSIS	ANA1160
	30	REAR PANEL	ANC1786
	31	METAL BONNET	ANE1323
	32	MAGNET PLATE	ANG1558
	33	TUNER ASSEMBLY	AWE1230
	34	…………	
	35	DUMPER ASSY	AXA1013
	36	MAGNET	AXX1016
	37	SCREW	BBZ26P080FMC
	38	NUT	NK90FUC
	39	FOOT ASSY(ABS)	RXA1448
⚠	40	FUSE(FU1 T2.5A)	AEK-512
⚠	41	FUSE(FU2 T1A)	AEK-508
⚠	42	FUSE(FU4 T5A)	AEK-515
⚠	43	FUSE(FU5 T5A)	AEK-515
⚠	44	FUSE(FU6 T1.6A)	AEK-510
⚠	45	FUSE(FU7 T1.6A)	AEK-510
	46	FUSE(FU8 T2A)	AEK-511
	47	FFC	ADD1102
⚠	48	POWER TRANSFORMER (T1)	ATT1178
◉	49	AF ASSEMBLY	AWZ3764
◉	50	DISPLAY ASSEMBLY	AWZ3769
◉	51	VOLUME ASSEMBLY	AWZ3771
◉	52	FUSE ASSEMBLY	AWZ3975
	53	SHIELD ASSY	AWZ4117

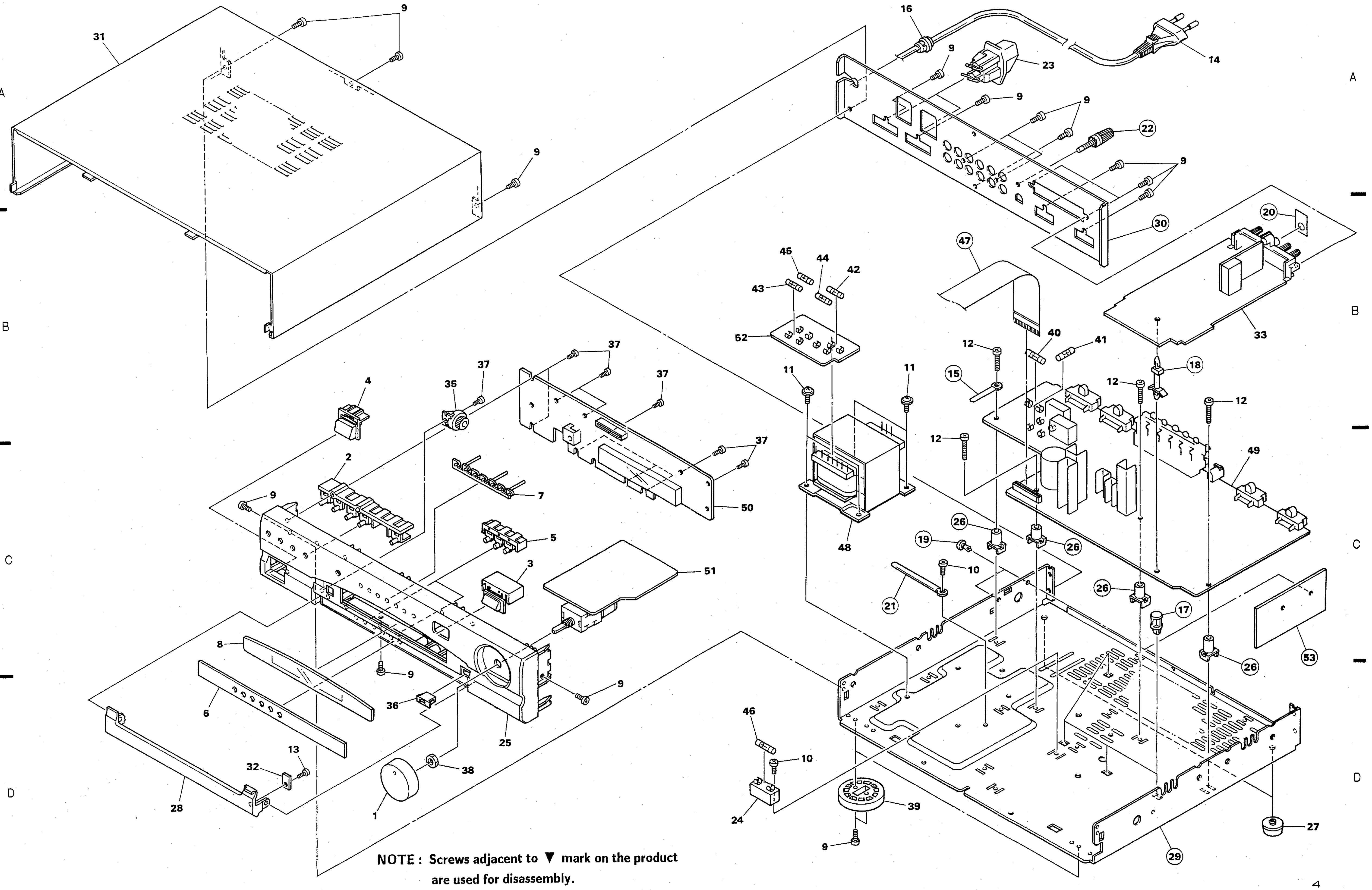
1
2
3
4
5
A
B
C
D
31
9
16
23
14
22
30
20
47
45
44
42
43
52
33
40
41
12
15
18
11
4
35
37
2
7
50
5
48
49
26
19
10
3
51
21
17
8
36
6
25
46
53
13
32
38
39
24
27
28
1
29
6

NOTE : Screws adjacent to ▼ mark on the product are used for disassembly.

2. PCB PARTS LIST

NOTES :

- *Part without part number cannot be supplied.*
- *Parts marked by "◉" are not always kept in stock. Their delivery time may be longer than usual or they may be unavailable.*
- *The ⚠ mark found on some component parts indicates the importance of the safety factor of the part. Therefore, when replacing, be sure to use parts of identical designation.*
- *When ordering resistors, first convert resistance values into code form as shown in the following examples.*

Ex.1 *When there are 2 effective digits (any digit apart from 0), such as 560 ohm and 47k ohm (tolerance is shown by J = 5%, and K = 10%).*

560Ω 56×10^1 561 ……… RD1/4PS$\boxed{5}\boxed{6}\boxed{1}$J
47kΩ 47×10^3 473 ……… RD1/4PS$\boxed{4}\boxed{7}\boxed{3}$J
0.5Ω 0R5 ……… RD2H$\boxed{0}\boxed{R}\boxed{5}$K
1Ω 010 ……… RD1P$\boxed{0}\boxed{1}\boxed{0}$K

Ex.2 *When there are 3 effective digits (such as in high precision metal film resistors).*

5.62kΩ 562×10^1 5621 ……… RD1/4SR$\boxed{5}\boxed{6}\boxed{2}\boxed{1}$F

LIST OF ASSEMBLIES

Mark	No. Description	Parts No.
	TUNER ASSEMBLY	AWE1230
◉	AF ASSEMBLY	AWZ3764
◉	DISPLAY ASSEMBLY	AWZ3769
◉	VOLUME ASSEMBLY	AWZ3771
◉	FUSE ASSEMBLY	AWZ3975

TUNER ASSEMBLY(AWE1230)

SEMICONDUCTORS

Mark	No. Description	Parts No.
	IC901 PLL IC	LM7001
	IC902 AM/FM IC	LA1265S
	IC903 MPX IC	AN7470P
	Q901 N−FET	2SK246
	Q902 TRANSISTOR	2SC1740SLN
	Q903,904 TRANSISTOR	RN1203
	Q905−907 TRANSISTOR	RN2201
	Q908 TRANSISTOR	RN1203
	Q909 TRANSISTOR	2SC2668
	Q910−913 TRANSISTOR	2SC2458
	Q914 TRANSISTOR	2SA1048
	D901 DIODE	1SV156
	D902 DIODE	HSS104−02
	D903,904 DIODE	1SS85
	D905−912 DIODE	HSS104−02

COILS AND FILTERS

Mark	No. Description	Parts No.
	L901 AXIAL INDUCTOR	LAU2R2M
	L903 AXIAL INDUCTOR	LAU2R2M
	L904 AXIAL INDUCTOR	LAU010M
	L905 AXIAL INDUCTOR	LAU2R2M
	L907 COIL	ATE−079
	L908 AXIAL INDUCTOR	LAU2R2M
	F903 CERAMIC FILTER	ATF−119
	F904 CERAMIC FILTER	ATF1042
	F905 CERAMIC FILTER	ATF−107
	F906 FILTER	ATF1088

CAPACITORS

Mark	No. Description	Parts No.
	C901 ELECTR.CAPACITOR	CEAS330M16
	C902 CERAMIC CAPACITOR	CKDYF102Z50
	C903 CERAMIC CAPACITOR	CKPUYB101K50
	C904 CERAMIC CAPACITOR	CKPUYB102K50
	C905 AUDIO FILM CAPACITOR	CFTXA103J50
	C906 AUDIO FILM CAPACITOR	CFTXA224J50
	C907 CERAMIC CAPACITOR	CKPUYB102K50
	C909 CERAMIC CAPACITOR	CKDYF103Z50
	C910 CERAMIC CAPACITOR	CKPUYB101K50
	C911 CERAMIC CAPACITOR	CKPUYF103Z25
	C912 CERAMIC CAPACITOR	CCDCH150J50
	C913 CERAMIC CAPACITOR	CKDYF223Z50
	C914 CERAMIC CAPACITOR	CCDCH150J50
	C915 CERAMIC CAPACITOR	CKDYF223Z50
	C916 CERAMIC CAPACITOR	CKPUYF103Z25
	C919 CERAMIC CAPACITOR	CKDYF223Z50
	C922 CERAMIC CAPACITOR	CKDYF223Z50
	C923 CERAMIC CAPACITOR	CKPUYF223Z25
	C924 ELECTR.CAPACITOR	CEAS470M10
	C925 CERAMIC CAPACITOR	CKPUYF103Z25
	C926 ELECTR.CAPACITOR	CEAS330M16
	C927 CERAMIC CAPACITOR	CCDSL470J50
	C928 ELECTR.CAPACITOR	CEAS470M10
	C929 CERAMIC CAPACITOR	CKPUYF103Z25
	C930 ELECTR.CAPACITOR	CEAS330M16
	C931 CERAMIC CAPACITOR	CKPUYF223Z25
	C932−935 CERAMIC CAPACITOR	CKDYF223Z50
	C936 ELECTR.CAPACITOR	CEAS4R7M50
	C937 CERAMIC CAPACITOR	CKDYF223Z50
	C938 ELECTR.CAPACITOR	CEAS010M50
	C939 CERAMIC CAPACITOR	CCDSL271J50
	C940 CERAMIC CAPACITOR	CKDYB222K50
	C941 CERAMIC CAPACITOR	CKDYF473Z50
	C942 ELECTR.CAPACITOR	CEAS2R2M50
	C943 ELECTR.CAPACITOR	CEAS470M10
	C944 ELECTR.CAPACITOR	CEAS0R1M50
	C945 ELECTR.CAPACITOR	CEANP2R2M50
	C946 ELECTR.CAPACITOR	CEAS470M25
	C947 CERAMIC CAPACITOR	CKDYF473Z50
	C948 CAPACITOR	ACE1039
	C949 ELECTROLYTIC CAPACIT	CEAS1R5M50
	C950 ELECTR.CAPACITOR	CEAS3R3M50
	C951 ELECTR.CAPACITOR	CEAS470M10
	C952,953 CERAMIC CAPACITOR	CKDYB122K50
	C954 ELECTR.CAPACITOR	CEAS0R1M50
	C955 ELECTR.CAPACITOR	CEASR22M50
	C956 CERAMIC CAPACITOR	CKDYB122K50
	C957,958 ELECTR.CAPACITOR	CEAS2R2M50
	C959 CERAMIC CAPACITOR	CKPUYF223Z25
	C960 ELECTR.CAPACITOR	CEAS0R1M50
	C961,962 CERAMIC CAPACITOR	CKDYB272K50
	C963 ELECTR.CAPACITOR	CEAS2R2M50
	C964 CERAMIC CAPACITOR	CKPUYB101K50
	C965 CERAMIC CAPACITOR	CKPUYB102K50

RESISTORS

Mark	No. Description	Parts No.
	VR901 VR(10kΩ)	ACP1043
	VR902 VR(22kΩ)	ACP1044
	VR903 VR(4.7kΩ)	ACP1042
	Other Resistors	RD1/8PM□□□J

OTHERS

Mark	No. Description	Parts No.
	X901 CRYSTAL RESO. (7.2MHz)	ASS1042
	X902 CERAMIC RESO. (450kHz)	ATF1027
	2 SERIAL FE MODULE ASSY	AXQ1002
	AM RF TUNING BLOCK	AXX1012
	AM RF TUNING BLOCK	AXX1013
	ANTENNA TERMINAL (4P)	AKA1010

◉AF ASSEMBLY(AWZ3764)

SEMICONDUCTORS

Mark	No. Description	Parts No.
	IC101,102 REGULATOR IC	NJM7812FA
	IC103 REGULATOR IC	NJM7912FA
	IC104 REGULATOR IC	NJM7805FA
	IC105 REGULATOR IC	NJM7905FA
	IC106 REGULATOR IC	NJM78M56FAS
	IC201 OP−AMP IC	RC4558DXP
	IC202 IC	UPC4570C
	IC203 OP−AMP IC	RC4558DXP
	IC204,205 LOGIC IC	TC4052BP
	IC206 LOGIC IC	XRU4066B
	IC207 LOGIC IC	TC4053BP
	IC301 SYSTEM MCU	PD5170B
	Q101,102 TRANSISTOR	2SA1306
	Q103 TRANSISTOR	2SD438
	Q104 TRANSISTOR	2SA1515
	Q105 TRANSISTOR	2SC3377
	Q107 TRANSISTOR	2SA1048
	Q108 TRANSISTOR	2SC2458
	Q109 TRANSISTOR	2SB560
	Q112 TRANSISTOR	2SD438
	Q113 TRANSISTOR	2SC2458
	Q201 TRANSISTOR	RN2203
	Q202 TRANSISTOR	2SA1048
	Q203,204 TRANSISTOR	RN2203
	Q205 TRANSISTOR	2SC2458
	Q301 TRANSISTOR	RN1203
	Q398 N−FET	2SK373
	Q399 TRANSISTOR	RN2203
	D101 DIODE	D3SBA20(A)
	D102 DIODE	RB152
	D103,104 DIODE	S5566
	D105 ZENER DIODE	RD33ESB
	D106 DIODE	S5566
	D109−111 DIODE	1SS252
	D112,113 ZENER DIODE	RD6.2ESB
	D114 ZENER DIODE	RD10ESB3
	D115,116 ZENER DIODE	RD6.2ESB
	D202,203 DIODE	1SS252
	D301 DIODE	1SS252
	D307 ZENER DIODE	RD6.2ESB
	D308 DIODE	1SS252
	D399 DIODE	1SS252

RELAYS

Mark	No. Description	Parts No.
	RY101 RELAY	ASR1036
	RY102 RELAY	ASR1032

FILTERS

Mark	No. Description	Parts No.
	L101 FILTER	ATF−163
	L301 AXIAL INDUCTOR	LAU220K

CAPACITORS

Mark	No. Description	Parts No.
	C101 CKA (0.01/AC400V)	ACG1003
	C102,103 POLYESTER CAPACITOR	CQMXA103J100
	C104 ELECTROLYTIC CAPACIT	ACH1211
	C105 ELECTROLYTIC CAPACIT	CEHAQ102M35
	C106 ELECTR.CAPACITOR	CEAS222M16
	C107 ELECTR.CAPACITOR	CEAS102M16
	C108 ELECTR.CAPACITOR	CEHAQ100M50
	C109 ELECTROLYTIC CAPACIT	CEHAQ470M25
	C110 ELECTR.CAPACITOR	CEHAQ100M50
	C111 ELECTROLYTIC CAPACIT	CEHAQ470M25
	C112 ELECTR.CAPACITOR	CEHAQ100M50
	C113 ELECTROLYTIC CAPACIT	CEHAQ470M25
	C114 ELECTR.CAPACITOR	CEHAQ100M50
	C115 ELECTROLYTIC CAPACIT	CEHAQ470M16
	C116 ELECTROLYTIC CAPACIT	CEHAQ100M50
	C117 ELECTROLYTIC CAPACIT	CEHAQ470M16
	C118 ELECTROLYTIC CAPACIT	CEAS102M50
	C119 ELECTROLYTIC CAPACIT	CEHAQ331M50
	C120 ELECTROLYTIC CAPACIT	CEAS470M50
	C121 ELECTR.CAPACITOR	CEAS470M50
	C122 ELECTROLYTIC CAPACIT	CEHAQ470M10
	C123 ELECTR.CAPACITOR	CEAS470M50
	C217,218 ELECTR.CAPACITOR	CEAS2R2M50
	C219,220 CERAMIC CAPACITOR	CKPUYB101K50

Mark	No.	Description	Parts No.
	C225,226	ELECTR.CAPACITOR	CEAS470M10
	C231,232	CERAMIC CAPACITOR	CKPUYB101K50
	C235	CERAMIC CAPACITOR	CKDYB562K50
	C236	CERAMIC CAPACITOR	CKCYB562K50
	C237,238	CERAMIC CAPACITOR	CKCYB152K50
	C239,240	ELECTR.CAPACITOR	CEAS3R3M50
	C241,242	ELECTR.CAPACITOR	CEAS470M10
	C243,244	ELECTR.CAPACITOR	CEAS100M25
	C249,250	ELECTR.CAPACITOR	CEAS100M25
	C257	CERAMIC CAPACITOR	CKCYX103M25
	C301	CERAMIC CAPACITOR	CKCYX473M25
	C302	CERAMIC CAPACITOR	CKCYF473Z50
	C303	ELECTR.CAPACITOR	CEAS470M16
	C304	CERAMIC CAPACITOR	CKCYX473M25
	C305	ELECTR.CAPACITOR	CEAS010M50
	C306	CERAMIC CAPACITOR	CKCYB102K50
	C307	CERAMIC CAPACITOR	CKDYB102K50

RESISTORS

Mark	No.	Description	Parts No.
	R102	METAL OXIDE RESISTOR	RS1LMF102J
	R104	METAL OXIDE RESISTOR	RS1LMF102J
	R106	METAL OXIDE RESISTOR	RS1LMF562J
	R107	FUSLIBLE RESISTOR	RFA1/4PL4R7J
	R116	METAL OXIDE RESISTOR	RS3LMF151J
	R117	METAL OXIDE RESISTOR	RS3LMF181J
	R119,120	CARBON FILM RESISTOR	RD1/4PMF470J
	R121－124	CARBON FILM RESISTOR	RD1/4PM100J
	R127	METAL OXIDE RESISTOR	RS1LMF180J
	R245,246	CARBON FILM RESISTOR	RD1/4PM820J
	R305	RESISTOR ARRAY (56kΩ)	RA5T563J
	R312	RESISTOR ARRAY (56kΩ)	RA5T563J
	R345	RESISTOR ARRAY (56kΩ)	RA5T563J
		Other Resistors	RD1/8PM□□□J

OTHERS

Mark	No.	Description	Parts No.
	X301	CERAMIC RESO. (4MHz)	ASS1025
	CN2	CONNECTOR(15P)	KPE15
	CN3	CONNECTOR(13P)	KPE13
	CN5	SOCKET(27P)	AKP1099
	CN6	SOCKET(10P)	AKP1073
	CN7	SOCKET(9P)	AKP1072
		JACK	AKN－203
		PIN JACK(6P)	AKB1121
		PIN JACK(6P)	AKB1129
		SCREW	BBZ30P080FZK
		SOCKET(15P)	AKP1049

●DISPLAY ASSEMBLY(AWZ3769)

SEMICONDUCTORS

Mark	No.	Description	Parts No.
	IC701	LOGIC IC	SN74LS42N
	IC702	CONTROL MCU	PDG075A
	Q701	TRANSISTOR	XDC143ES
	Q702	TRANSISTOR	2SC2458
	D701	DIODE	1SS252
	D702－708	LED(RED)	AEL1108
	D709－711	DIODE	1SS252
	D712	ZENER DIODE	RD6.2ESB
	D713－721	DIODE	1SS252

SWITCHES

Mark	No.	Description	Parts No.
	S701－716	SWITCH (SURROUND MODE, FUNC, STATION MEMORY, LOCAL/DX, SET, WAKE UP, REC, CLOCK ADJ, AUDITION, CENTER MODE, DELAY TIME, POWER, BAND, FREQ/ST, DOWN, UP)	ASG1034

FILTER

Mark	No.	Description	Parts No.
	L701	AXIAL INDUCTOR	LAU220K

CAPACITORS

Mark	No.	Description	Parts No.
	C702	ELECTROLYTIC CAPACIT	CEJA4R7M35
	C703	CERAMIC CAPACITOR	CKCYF223Z50
	C704	CERAMIC CAPACITOR	CKPUYF473Z16
	C705	ELECTR.CAPACITOR	CEJA010M50
	C706	ELECTR.CAPACITOR	CEAS2R2M50
	C707	CERAMIC CAPACITOR	CKCYB102K50
	C708	ELECTR.CAPACITOR	CEJA470M10
	C709	CERAMIC CAPACITOR	CKCYX473M25
	C710	CEA (47000/5.5V)	ACH1037
	C711	ELECTR.CAPACITOR	CEJA470M10
	C712	ELECTR.CAPACITOR	CEAS4R7M50
	C713	CERAMIC CAPACITOR	CKPUYF473Z16
	C715	ELECTR.CAPACITOR	CEAS471M10
	C716	CERAMIC CAPACITOR	CKDYB472K50

RESISTORS

Mark	No.	Description	Parts No.
	R734	RESISTOR ARRAY (47kΩ)	RA8S473J
	R745	RESISTOR ARRAY (47kΩ)	RA8S473J
	R746	RESISTOR ARRAY (47kΩ)	RA11S473J
		Other Resistors	RD1/8PM□□□J

OTHERS

Mark	No.	Description	Parts No.
	V701	FL TUBE	AAV1138
	X702	CRYSTAL RESO. (8MHz)	ASS1015
	CN4	SOCKET(27P)	AKP1099
		REMOTE RECEIVER UNIT	AXX1010

●VOLUME ASSEMBLY(AWZ3771)

SEMICONDUCTORS

Mark	No.	Description	Parts No.
	IC1601	MECHANISM DRIVER IC	TA7291S
	IC1602	IC	UPC4570C
	Q1601,1602	TRANSISTOR	2SC2878
	Q1605	TRANSISTOR	RN2203

FILTER

Mark	No.	Description	Parts No.
	L1601	AXIAL INDUCTOR	LAU221K

CAPACITORS

Mark	No.	Description	Parts No.
	C1601－1604	ELECTR.CAPACITOR	CEAS2R2M50
	C1605,1606	ELECTR.CAPACITOR	CEAS100M25
	C1607,1608	ELECTR.CAPACITOR	CEAS101M16
	C1609,1610	CERAMIC CAPACITOR	CKCYX104M25
	C1627	CERAMIC CAPACITOR	CKCYX473M25
	C1629,1630	CERAMIC CAPACITOR	CKCYB331K50
	C1631	ELECTR.CAPACITOR	CEAS101M16

Mark	No.	Description	Parts No.
RESISTORS			
	VR1601	VARIABLE RESISTOR	ACX1064
	R1613,1614	CARBON FILM RESISTOR	RD1/4PM121J
		Other Resistors	RD1/8PM□□□J

●FUSE ASSEMBLY(AWZ3975)

FUSE assembly has no service part.

3. PANEL FACILITIES

REAR PANEL FACILITIES

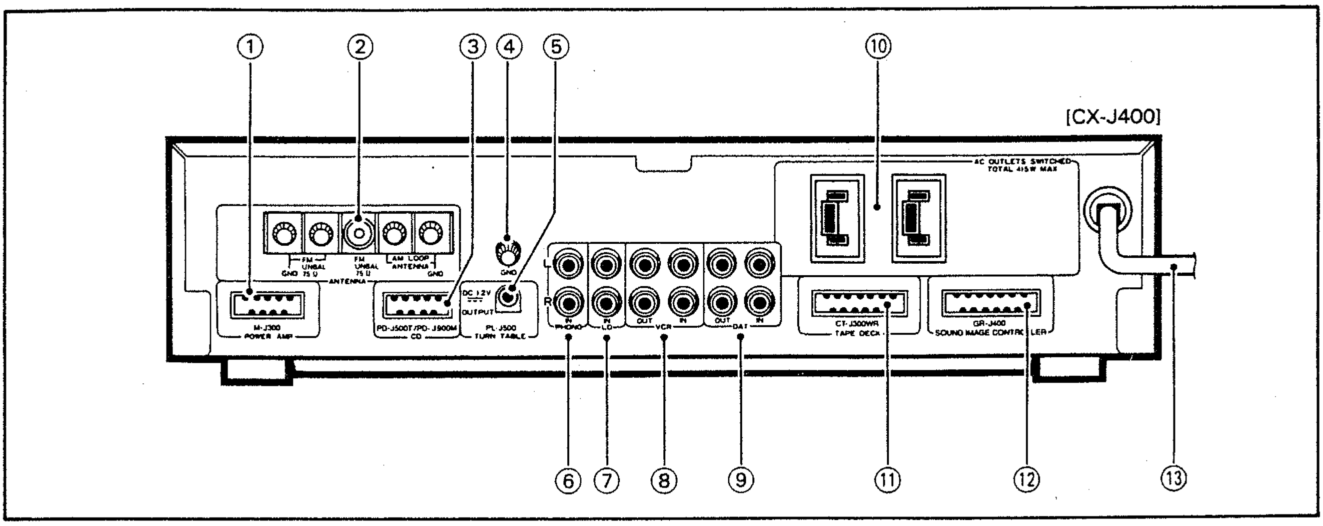
①
②
③
④
⑤
⑩
[CX-J400]
AC OUTLETS SWITCHED TOTAL 415W MAX
FM UNBAL 75 Ω
GND
FM UNBAL 75 Ω
AM LOOP ANTENNA
GND
ANTENNA
GND
M-J300 POWER AMP
PD-J500T/PD-J900M CD
DC 12V OUTPUT
PL-J500 TURN TABLE
L
R
IN PHONO
IN LD
OUT IN VCR
OUT IN DAT
CT-J300WR TAPE DECK
GR-J400 SOUND IMAGE CONTROLLER
⑥
⑦
⑧
⑨
⑪
⑫
⑬

① POWER AMP jack

Connect the power amplifier (M-J200/M-J300) system cable here.

② FM/AM ANTENNA terminals

Antennas must be connected to these terminals: otherwise you will not be able to receive stations. See page 11 for details on ANTENNA CONNECTIONS.

③ CD jack

Connect the compact disc player (PD-J400T/PD-J500T/PD-J800M/PD-J900M) system cable here.

④ Ground terminal (GND)

Connect this to the ground terminal on the turntable (except for PL-J400/PL-J500).

⑤ TURNTABLE (DC 12V OUTPUT) jack

This jack supplies power to the turntable PL-J400/PL-J500.

⑥ PHONO input jacks

Connect the audio output cord of the turntable to these jacks.

⑦ LD input jacks

Connect to the output jacks of the LD player.

⑧ VCR jacks

IN : Connect to the audio output jacks of VCR.
OUT : Connect to the audio input jacks of VCR.

⑨ DAT jacks

IN : Connect to the analog audio output jacks of the digital audio tape deck.
OUT : Connect to the analog audio input jacks of the digital audio tape deck.

⑩ AC OUTLETS (SWITCHED TOTAL 415 W MAX)

Power supplied through this outlet is turned on and off by the tuner control amplifier's POWER switch. Total electrical power consumption of connected equipment should not exceed 415 W.
PD-J400T/PD-J500T or PD-J800M/PD-J900M CD player power cords, and the M-J200/M-J300 power amplifier cords can be connected.

NOTE:
Do not connect appliances with high power consumption such as heaters, irons, or television sets to the AC OUTLETS in order to avoid overheating or fire risk.
This can cause the tuner control amplifier to malfunction.

CAUTION:
DO NOT CONNECT TV SET OR MONITOR.

⑪ TAPE DECK jack

Connect the cassette deck system cable here.

⑫ SOUND IMAGE CONTROLLER jack

Connect the sound image controller system cable here.

⑬ Power cord

Connect this to the AC wall socket.

FRONT PANEL FACILITIES

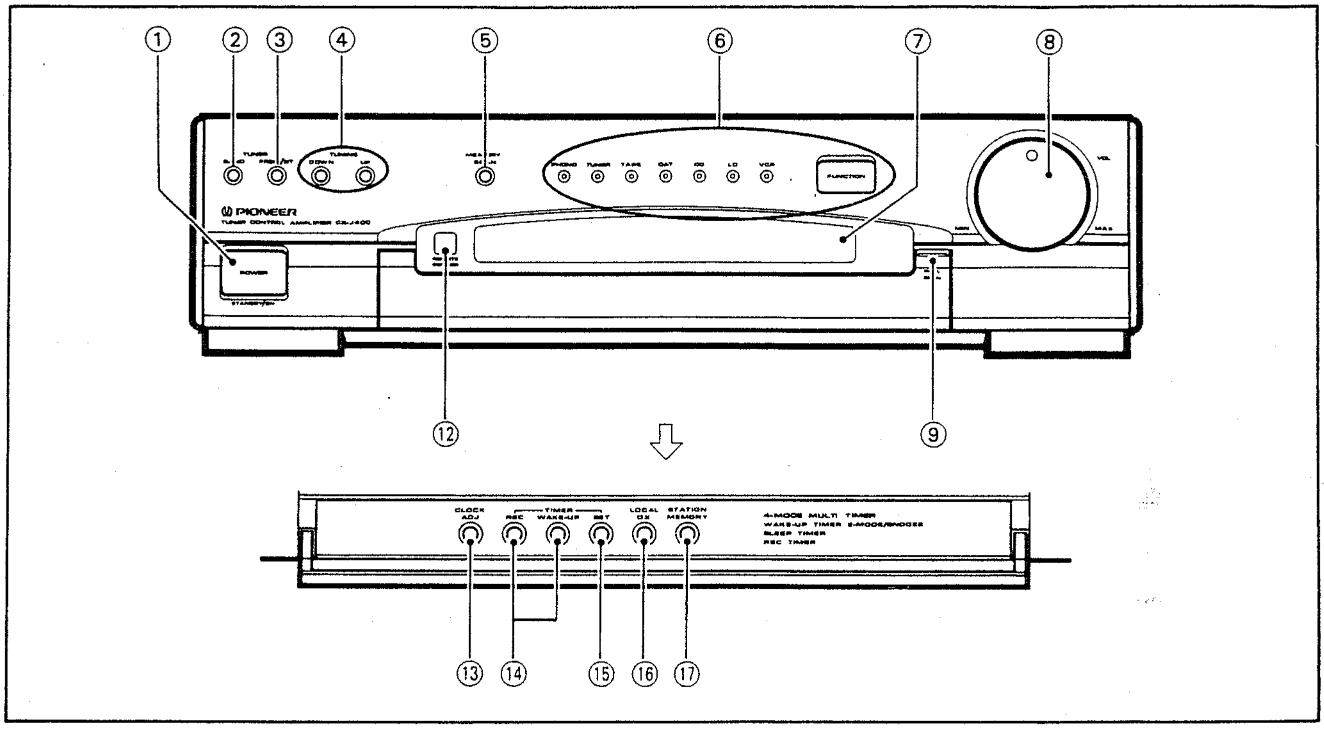

① POWER STANDBY/ON switch

This is the switch for electric power.

ON .... When set to the ON position, power is supplied and the unit becomes operational.

STANDBY .. When set to the STANDBY position, the main power flow is cut and the unit is no longer fully operational. A minute flow of power feeds the unit to maintain operation readiness.

- When only the time is indicated in the display section, the unit is in STANDBY.

② BAND selector button

Each time this button is pressed, FM, MW or LW (U.K. and European models only) reception is selected in order.

③ FREQ/ST (Frequency/Station) button

Press to switch between frequency and station modes.

④ TUNING (UP, DOWN) buttons

[During tuning]

- When in the Frequency mode, use to raise and lower the reception frequency.
- When in the Station mode, use to raise and lower the station number.

[During time and timer setting]

Used for adjusting the clock, timer settings and its relayed adjustments.

⑤ MEMORY SCAN button

Press this button to scan programs on the preset stations automatically for 7 seconds each. If you wish to continue listening to the station currently being scanned, press this button again to lock the tuning to the station. This will cancel the preset scan function and return you to normal reception.

⑥ FUNCTION button/indicators

Each time you press the FUNCTION button, the tuner control amplifier function changes. The selected function's indicator lights.

[PHONO]
Select to play records on a turntable connected to the PHONO input jacks.

[TUNER]
Select to listen to radio broadcast.

[TAPE]
Select to listen to cassette tape.

[DAT]
Select to listen a DAT playing on a digital audio tape deck connected to the DAT jacks.

[CD]
Select to listen to compact disc.

[LD]
Select to play an LD on a video disc player connected to the LD input jacks.

[VCR]
Select to play a tape on a video cassette recorder connected to the VCR jacks.

⑦ Display section

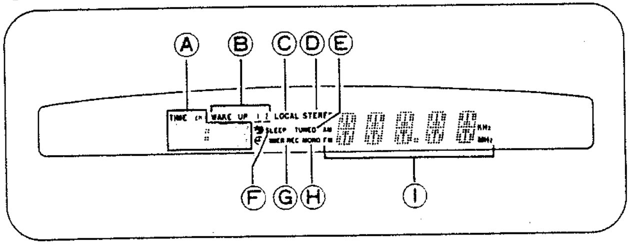

Ⓐ Time/channel indicator
Normally indicates the current time. The current time is shown when the display is in the frequency mode; the channel number is shown when the display is in the station mode.

Ⓑ WAKE UP timer indicator
Displays the selected wake up timer.

Ⓒ LOCAL indicator
Lights when the LOCAL/DX button ⑮ is set to ON.

Ⓓ STEREO indicator
Lights when an FM stereo broadcast is received (FM MONO button on the remote control unit set to OFF).

Ⓔ TUNED indicator
Lights when a broadcast is received and tuned in well.

Ⓕ SLEEP indicator
Indicates that the sleep timer is activated.

Ⓖ REC timer indicator
Displays the timer's setting condition.

Ⓗ MONO indicator
Lights when the FM MONO button on the remote control unit is set to ON. When this indicator is lit, FM stereo broadcasts are reproduced monaurally.

Ⓘ Frequency display
Shows received broadcast frequency. Also gives scrolling display of main function status.
FM and MHz light: FM reception.
AM and kHz light: MW or LW (U.K. and European models only) reception.

⑧ VOL (volume) control

⑨ Open this with your finger.

⑫ Remote sensor window

⑬ CLOCK ADJ button

Used for starting the clock adjustment.

⑭ Timer selector buttons

[WAKE-UP 1, 2]
Used for timer playback setting.
[REC]
Used for timer recording setting.

⑮ SET button

Used for current time, timer playback, and timer recording setting.

⑯ LOCAL/DX button (when receiving FM broadcasts)

Use this if the broadcast signal is too strong, causing noise and distortion. The attenuator reduces the strength of the signal, reducing noise and distortion.

⑰ STATION MEMORY button

Used to memorizing stations.

4. SPECIFICATIONS

FM Tuner Section

Reception frequency range	87.5 MHz to 108.0 MHz
Usable Sensitivity	Mono: 12.8 dBf, IHF (1.2 μV/75 Ω)
Sensitivity (DIN)	MONO (S/N 26 dB: 1 μV/75 Ω) STEREO (S/N 46 dB: 1 μV/75 Ω)
Signal-to-Noise Ratio (IHF, 85 dBf input)	Mono: 77 dB
Signal-to-Noise Ratio (DIN)	Mono: 66 dB Stereo: 60 dB
Distortion	Stereo: 0.5 %, 1kHz
Antenna input	75 Ω unbalanced

AM (MW) Tuner Section

Frequency Range (For European and multi-voltage models)	531 kHz to 1,602 kHz
(For multi-voltage models)	530 kHz to 1,700 kHz
Sensitivity (IHF, Loop antenna)	350 μV/m
Antenna	Loop antenna

LW Tuner Section
(For LW equipped models only)

Frequency range	153 kHz to 281 MHz
Sensitivity (IHF, Loop antenna)	1,500 μV/m
Antenna	Loop antenna

Electrical Section, Other

Power requirements	
European models	AC 220 – 230 V, 50/60 Hz
U.K. models	AC 240 V, 50/60 Hz
Multi-voltage models	AC 110/120–127/220/240 V (switchable), 50/60 Hz
Power consumption	
European models	40 W
Multi-voltage models	50 W
AC outlet	Switched: 20 W or less
External dimensions	360 (W) x 90.5 (H) x 345 (D) mm
Weight	4.5 kg

* *Measured by Audio Spectrum Analyzer.*

5. SCHEMATIC DIAGRAMS AND PCB CONNECTIONS DIAGRAMS

OVERALL WIRING DIAGRAM

1.RESISTORS :
Indicated in Ω, 1/4W, 1/6W and 1/8W, ±5% tolerance unless otherwise noted k ; kΩ, M ; MΩ, (F) ; ±1%, (G) ; ±2%, (K) ; ±10%, (M) ; ±20% tolerance.

2.CAPACITORS :
Indicated in capacity (μF)/voltage(V) unless otherwise noted p ; pF. Indication without voltage is 50V except electrolytic capacitor.

3.VOLTAGE, CURRENT :
▭ ; DC voltage (V) at no input signal unless otherwise noted.
Value in ( ) is DC voltage at rated power.
⇦mA or ←mA ; DC current at no input signal unless otherwise noted.

4.OTHERS :
➡ ; Signal route.
⊘ ; Adjusting point
▼(red) : Measuring point
The ⚠ mark found on some component parts indicates the inportance of the safety factor of the part. Therefore, when replacing, be sure to use parts of identical designation.
※ marked capacitors and resistors have parts numbers.

This is the basic schematic diagram, but the actual circuit may vary due to improvements in design.

5. SWITCHES : (The underlined indicates the switch position)
DISPLAY ASSEMBLY

S701	SURROUND MODE
S702	FUNC
S703	STATION MEMORY
S704	LOCAL/DX
S705	SET
S706	WAKE UP
S707	REC
S708	CLOCK ADJ.
S709	AUDITION
S710	CENTER MODE
S711	DELAY TIME
S712	POWER
S713	BAND
S714	FREQ/ST
S715	DOWN
S716	UP

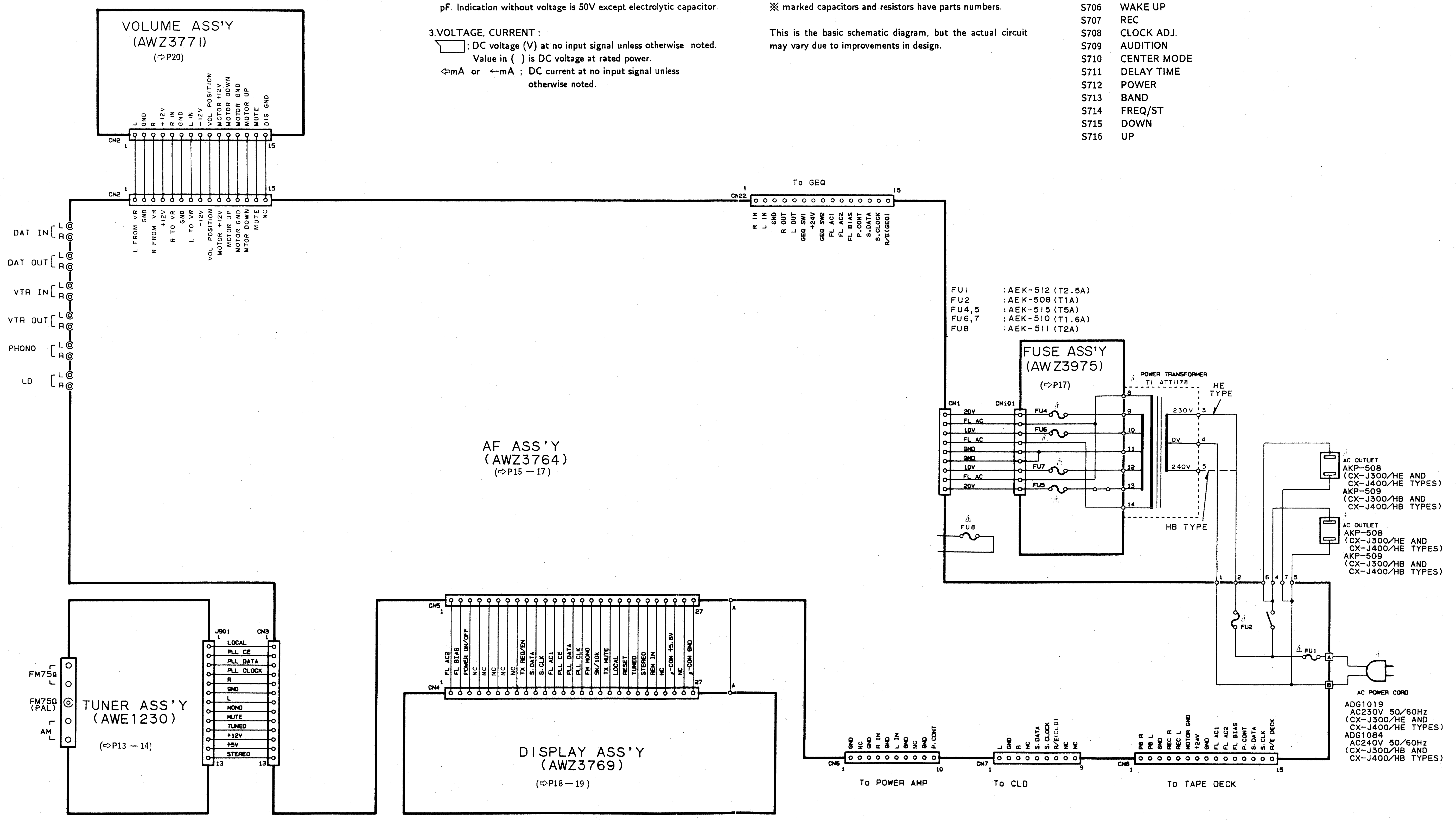
VOLUME ASS'Y
(AWZ3771)
(⇨P20)
L
GND
R
+12V
R IN
GND
L IN
−12V
VOL POSITION
MOTOR +12V
MOTOR DOWN
MOTOR GND
MOTOR UP
MUTE
DIG GND
CN2
1
15
L FROM VR
GND
R FROM VR
+12V
R TO VR
GND
L TO VR
−12V
VOL POSITION
MOTOR +12V
MOTOR UP
MOTOR GND
MTOR DOWN
MUTE
NC
DAT IN L R
DAT OUT L R
VTR IN L R
VTR OUT L R
PHONO L R
LD L R
To GEQ
CN22
R IN
L IN
GND
R OUT
L OUT
GEQ SW1
+24V
GEQ SW2
FL AC1
FL AC2
FL BIAS
P.CONT
S.DATA
S.CLOCK
R/E(GEQ)
FU1 :AEK-512 (T2.5A)
FU2 :AEK-508 (T1A)
FU4,5 :AEK-515 (T5A)
FU6,7 :AEK-510 (T1.6A)
FU8 :AEK-511 (T2A)
FUSE ASS'Y
(AWZ3975)
(⇨P17)
POWER TRANSFORMER
T1 ATT1178
HE TYPE
HB TYPE
CN1
CN101
20V
FL AC
10V
FL AC
GND
GND
10V
FL AC
20V
FU4
FU6
FU7
FU5
FU8
230V
0V
240V
AC OUTLET
AKP-508
(CX-J300/HE AND CX-J400/HE TYPES)
AKP-509
(CX-J300/HB AND CX-J400/HB TYPES)
AC OUTLET
AKP-508
(CX-J300/HE AND CX-J400/HE TYPES)
AKP-509
(CX-J300/HB AND CX-J400/HB TYPES)
FU2
FU1
A
B
AC POWER CORD
ADG1019
AC230V 50/60Hz
(CX-J300/HE AND CX-J400/HE TYPES)
ADG1084
AC240V 50/60Hz
(CX-J300/HB AND CX-J400/HB TYPES)
AF ASS'Y
(AWZ3764)
(⇨P15 — 17)
TUNER ASS'Y
(AWE1230)
(⇨P13 — 14)
FM75Ω
FM75Ω (PAL)
AM
J901
CN3
LOCAL
PLL CE
PLL DATA
PLL CLOCK
R
GND
L
MONO
MUTE
TUNED
+12V
+5V
STEREO
13
CN5
CN4
27
FL AC2
FL BIAS
POWER ON/OFF
NC
NC
NC
NC
NC
TX REQ/EN
S.DATA
S.CLK
FL AC1
PLL CE
PLL DATA
PLL CLK
FM MONO
9k/10k
TX MUTE
LOCAL
RESET
TUNED
STEREO
REM IN
NC
μ-COM +5.6V
NC
μ-COM GND
DISPLAY ASS'Y
(AWZ3769)
(⇨P18 — 19)
CN6
GND
NC
GND
R IN
GND
L IN
GND
NC
GND
P.CONT
10
To POWER AMP
CN7
L
GND
R
NC
S.DATA
S.CLOCK
R/E(CLD)
NC
NC
9
To CLD
CN8
PB R
PB L
GND
REC R
REC L
MOTOR GND
+24V
GND
FL AC1
FL AC2
FL BIAS
P.CONT
S.DATA
S.CLK
R/E DECK
To TAPE DECK

TUNER ASSY

IC903 AN7470P

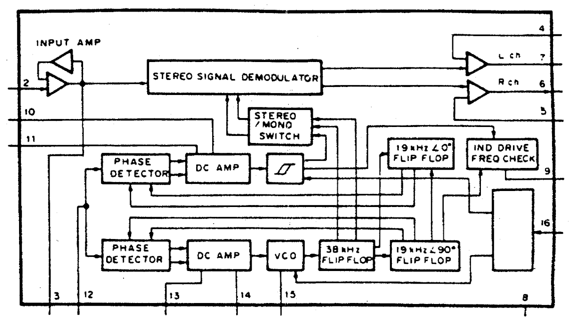
INPUT AMP
STEREO SIGNAL DEMODULATOR
L ch
R ch
STEREO / MONO SWITCH
PHASE DETECTOR
DC AMP
19kHz 0° FLIP FLOP
IND DRIVE FREQ CHECK
PHASE DETECTOR
DC AMP
VCO
38kHz FLIP FLOP
19kHz 90° FLIP FLOP

IC903 AN7470P

Pin No.	Voltage	Pin No.	Voltage	Pin No.	Voltage
1	11.2	9	4.9	15	3.2
2	2.6		0.6	16	0
3	6.1		(STEREO)		11.4
4	8.9	10	2.6		(AM)
5	8.9	11	2.6		4.0
6	3.9	12	2.6		(MONO)
7	3.9	13	2.6		
8	0	14	2.6		

IC902 LA1265S

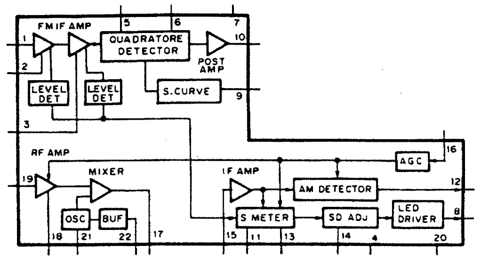
FM IF AMP
QUADRATORE DETECTOR
POST AMP
LEVEL DET
LEVEL DET
S.CURVE
RF AMP
MIXER
IF AMP
AM DETECTOR
AGC
OSC
BUF
S METER
SD ADJ
LED DRIVER

IC902 LA1265S

Pin No.	Voltage	Pin No.	Voltage	Pin No.	Voltage
1	2.3	10	2.8	17	0
2	2.3	11	1.5		12.0(AM)
3	2.3	12	1.5	18	0
4	0	13	1.4(MAX)		2.0(AM)
5	12.0	14	1.4(MAX)	19	0
6	12.0		0(AM)		2.0(AM)
7	12.0	15	2.3	20	3.8
8	0(T)		1.1(AM)	21	3.8
	5.1(D)	16	1.4	22	2.8
9	3.8				1.5(AM)

NOTE: (T): TUNE IND. ON; (D): TUNE IND. OFF.

IC901 LM7001

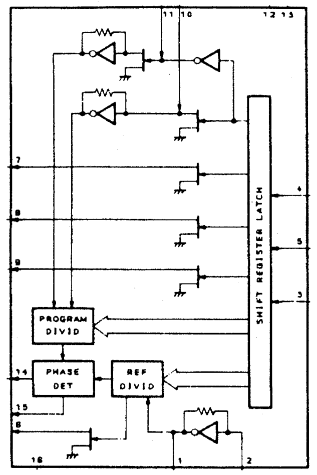
PROGRAM DIVID
PHASE DET
REF DIVID
SHIFT REGISTER LATCH

IC901 LM7001

Pin No.	Voltage	Pin No.	Voltage
1	1.1	9	0.46
2	1.5	10	0 1.7(AM)
3	0	11	2.7
4	0	12	5.0
5	0	13	5.0
6	GND	14	0.7
7	—	15	—
8	0	16	0

TUNER ASS'Y (AWE1230)

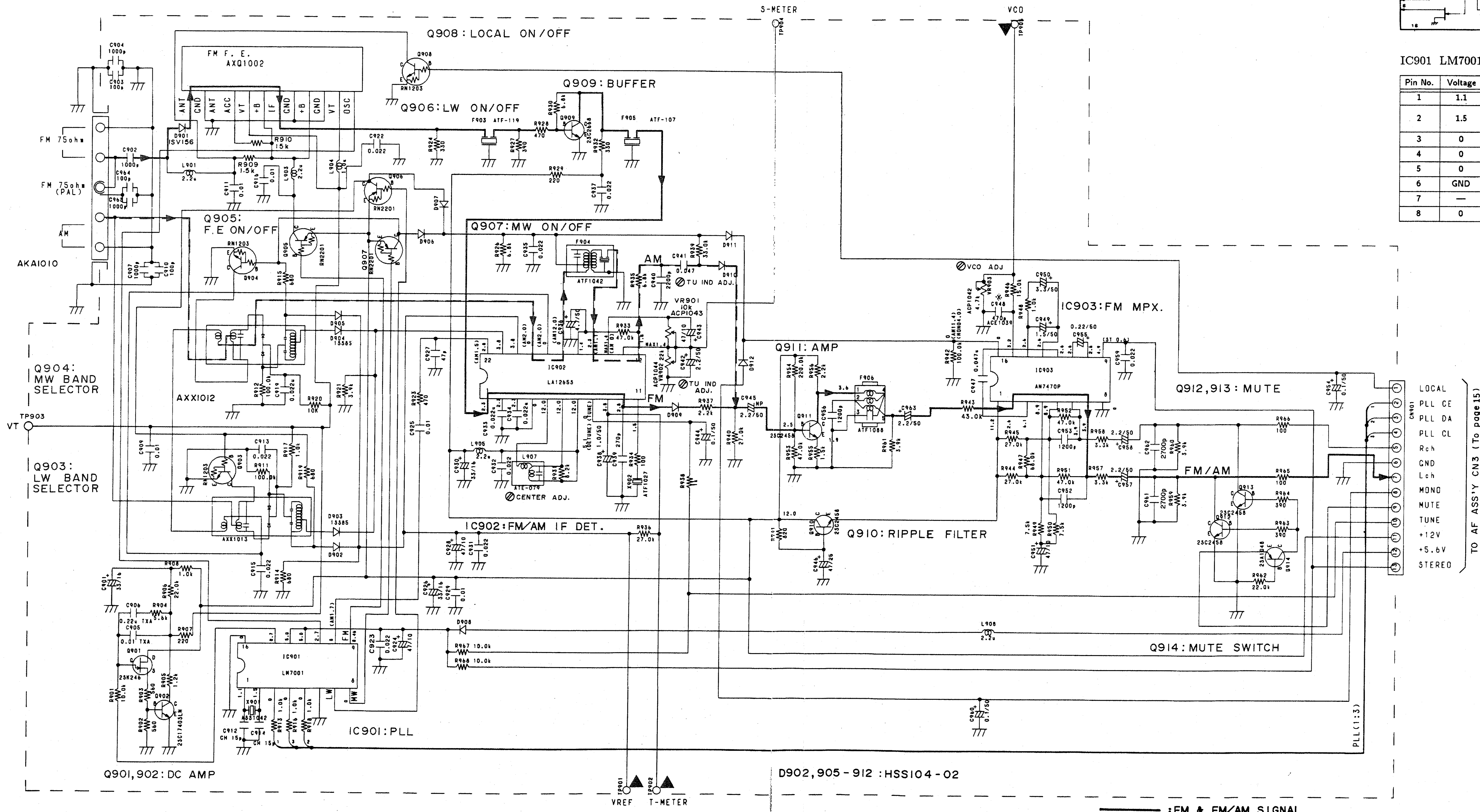
S-METER
VCO
TP904
TP905
FM F.E.
AXQ1002
ANT
GND
ANT
AGC
VT
+B
IF
GND
GND
VT
OSC
Q908: LOCAL ON/OFF
Q909: BUFFER
Q906: LW ON/OFF
F903 ATF-119
F905 ATF-107
FM 75ohm
FM 75ohm (PAL)
AM
AKA1010
Q905: F.E ON/OFF
Q907: MW ON/OFF
F904
ATF1042
AM
VR901 10k ACP1043
TU IND ADJ.
TU IND ADJ.
VCO ADJ
IC903: FM MPX.
IC903 AN7470P
Q911: AMP
F906
ATF1068
Q904: MW BAND SELECTOR
AXX1012
TP903
VT
IC902 LA1265S
FM
Q903: LW BAND SELECTOR
AXX1013
L907
ATE-074
CENTER ADJ.
IC902: FM/AM IF DET.
Q910: RIPPLE FILTER
Q912, 913: MUTE
FM/AM
LOCAL
PLL CE
PLL DA
PLL CL
Rch
GND
Lch
MONO
MUTE
TUNE
+12V
+5.6V
STEREO
CN901
TO AF ASS'Y CN3 (To page 15)
Q914: MUTE SWITCH
IC901 LM7001
IC901: PLL
X901 ASS1042
Q901, 902: DC AMP
D902, 905-912: HSS104-02
PLL(1:3)
TP901 VREF
TP902 T-METER

———— :FM & FM/AM SIGNAL
– – – – :AM SIGNAL

A

DISPLAY AND VOLUME ASSY

B

C

D

E

F

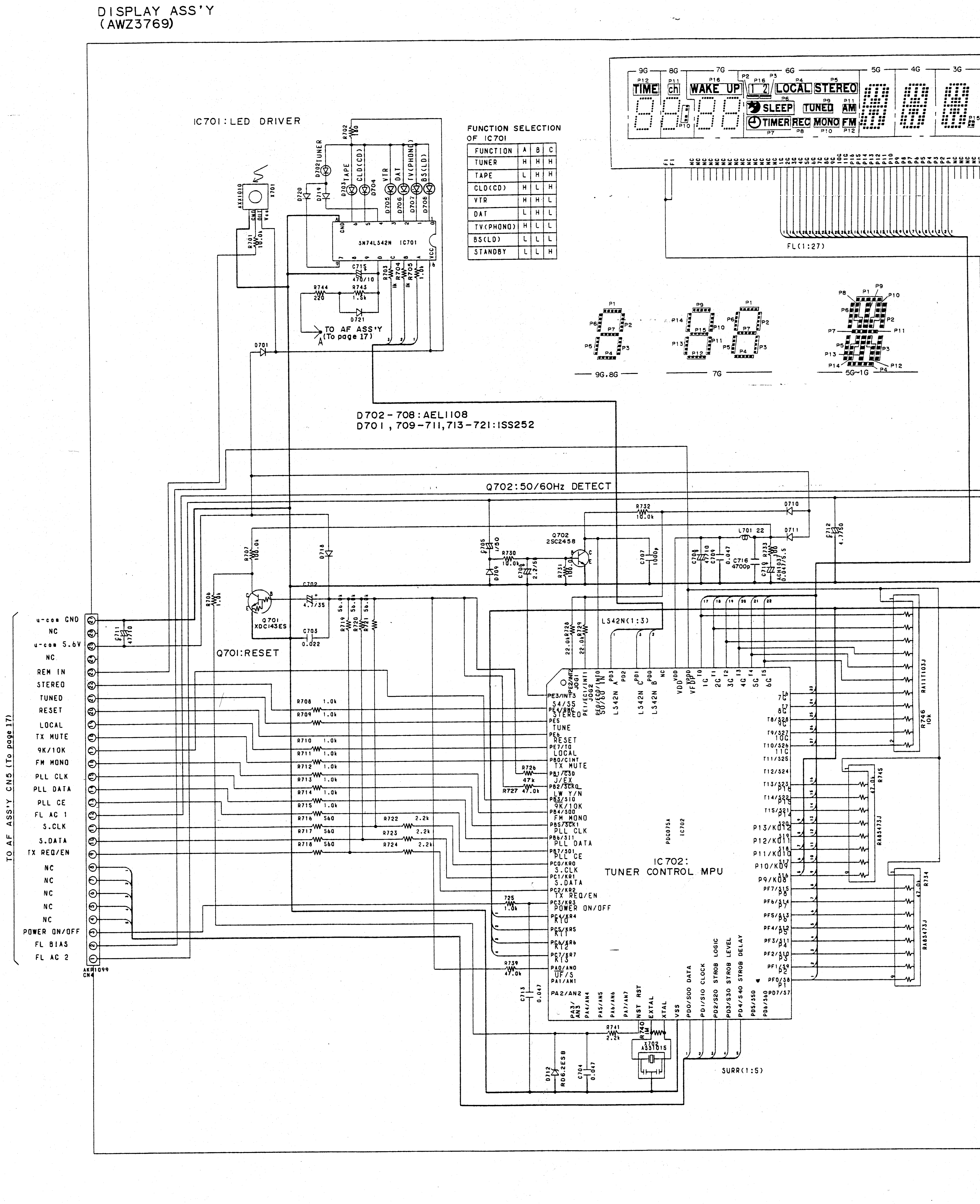
DISPLAY ASS'Y
(AWZ3769)
IC701:LED DRIVER
X701
AXX1010
R701 10.0k
SN74LS42N IC701
D702 TUNER
D703 TAPE
D704 CLD(CD)
D705 VTR
D706 DAT
D707 TV(PHONO)
D708 BS(LD)
D719
D720
C715 470/10
R703 1k
R704 1k
R705 1.0k
R744 220
R743 1.5k
D721
TO AF ASS'Y
(To page 17)
D701
D702-708:AEL1108
D701, 709-711,713-721:1SS252
9G 8G 7G 6G 5G 4G 3G
TIME
ch
WAKE UP
1 2
LOCAL
STEREO
SLEEP
TUNED
AM
TIMER
REC
MONO
FM
FL(1:27)
9G,8G
7G
5G~1G
Q702:50/60Hz DETECT
R732 10.0k
D710
D711
L701 22
C712 4.7/50
Q702 2SC2458
C705 1/50
R730 10.0k
C706 2.2/50
D709
R731 100
C707 1000p
C708 47/10
C709 0.047
C716 4700p
C710 47/10
R733 100
ACM1035 0.047/5.5
R707 100.0k
D718
Q701 XDC143ES
Q701:RESET
R706 1.0k
C711 47/10
C702 4.7/35
C703 0.022
R719 56.0k
R720 56.0k
R721 56.0k
R728 22.0k
R729 22.0k
LS42N(1:3)
u-com GND
NC
u-com 5.6V
NC
REM IN
STEREO
TUNED
RESET
LOCAL
TX MUTE
9K/10K
FM MONO
PLL CLK
PLL DATA
PLL CE
FL AC 1
S.CLK
S.DATA
TX REQ/EN
NC
NC
NC
NC
NC
POWER ON/OFF
FL BIAS
FL AC 2
TO AF ASS'Y CN5 (To page 17)
AKP1099
CN4
R708 1.0k
R709 1.0k
R710 1.0k
R711 1.0k
R712 1.0k
R713 1.0k
R714 1.0k
R715 1.0k
R716 560
R717 560
R718 560
R722 2.2k
R723 2.2k
R724 2.2k
R726 47k
R727 47.0k
R725 1.0k
R739 47.0k
C713 0.047
R741 2.2k
R740 1M
X702 ASS1015
D712 RD6.2ESB
C704 0.047
SURR(1:5)
IC702: TUNER CONTROL MPU
PD0075A
IC702
PE3/INT3
S4/S5
PE4/BNC
STEREO
PE5
TUNE
PE6
RESET
PE7/T0
LOCAL
PB0/CINT
TX MUTE
PB1/CS0
J/EX
PB2/SCK0
LW Y/N
PB3/SI0
9K/10K
PB4/SO0
FM MONO
PB5/SCK1
PLL CLK
PB6/SI1
PLL DATA
PB7/SO1
PLL CE
PC0/KR0
S.CLK
PC1/KR1
S.DATA
PC2/KR2
TX REQ/EN
PC3/KR3
POWER ON/OFF
PC4/KR4
KI0
PC5/KR5
KI1
PC6/KR6
KI2
PC7/KR7
KI3
PA0/AN0
UF/S
PA1/AN1
PA2/AN2
PA3/AN3
PA4/AN4
PA5/AN5
PA6/AN6
PA7/AN7
RST
XTAL
EXTAL
VSS
PD0/SO0 DATA
PD1/SI0 CLOCK
PD2/S20 STROB LOGIC
PD3/S30 STROB LEVEL
PD4/S40 STROB DELAY
PD5/S50
PD6/S60
PD7/S7
PE2/INT2
JOG2
PE1/EC1/INT1
JOG1
PE0/EC0/INT0
50/60 IN
PD3
LS42N A
PD2
PD1
LS42N C
PD0
LS42N B
NC
VDD
VDD
VFDP
T0
1G
2G
3G
4G
5G
6G
7G
8G
T8/S28
9G
T9/S27
10G
T10/S26
11G
T11/S25
T12/S24
T13/S23
P16
T14/S22
P15
T15/S21
P14
P13/K012
P12/K011
P11/K010
P10/K09
P9/K08
PF7/S15
P8
PF6/S14
P7
PF5/S13
P6
PF4/S12
P5
PF3/S11
P4
PF2/S10
P3
PF1/S9
P2
PF0/S8
P1
RA1I103J
R746 10k
R745 47.0k
RA8S473J
R734 47.0k
RA8S473J

FUNCTION SELECTION OF IC701

FUNCTION	A	B	C
TUNER	H	H	H
TAPE	L	H	H
CLD(CD)	H	L	H
VTR	H	H	L
DAT	L	H	L
TV(PHONO)	H	L	L
BS(LD)	L	L	L
STANDBY	L	L	H

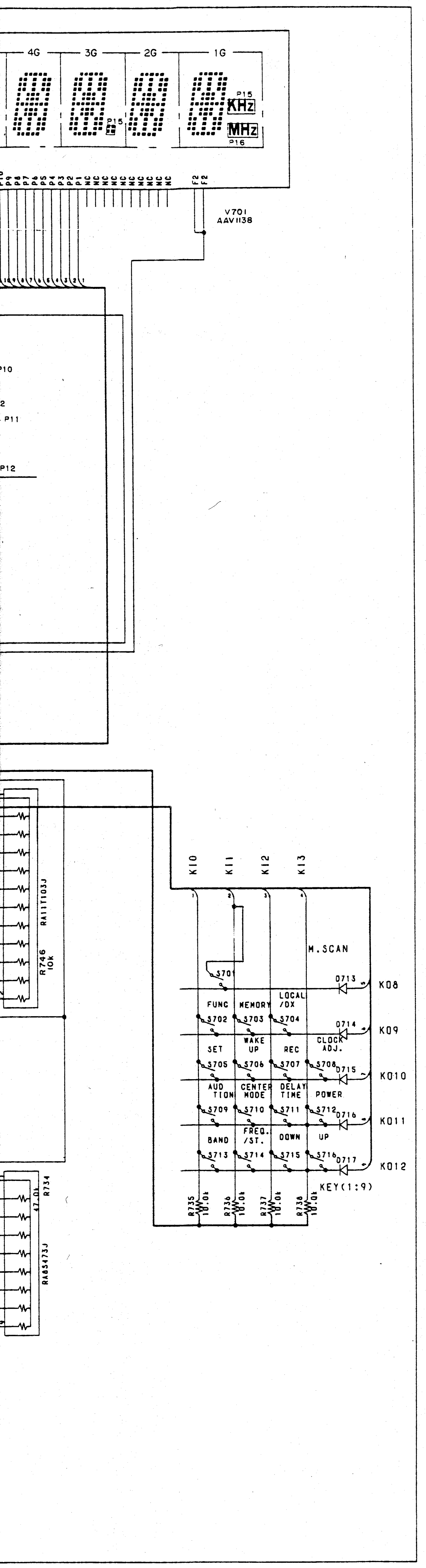
4G
3G
2G
1G
P15
KHz
MHz
P16
F2
V701
AAV1138
P10
P11
P12
RA11T103J
R746
10k
K10
K11
K12
K13
M.SCAN
S701
D713
K08
FUNC
MEMORY
LOCAL /DX
S702
S703
S704
D714
K09
SET
WAKE UP
REC
CLOCK ADJ.
S705
S706
S707
S708
D715
K010
AUD TION
CENTER MODE
DELAY TIME
POWER
S709
S710
S711
S712
D716
K011
BAND
FREQ. /ST.
DOWN
UP
S713
S714
S715
S716
D717
K012
KEY(1:9)
R735 10.0k
R736 10.0k
R737 10.0k
R738 10.0k
R734 47.0k
RA85473J

IC1601 TA7291S

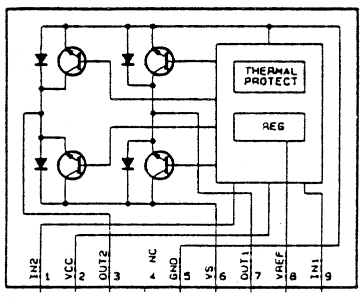
THERMAL PROTECT
REG
IN2 1
VCC 2
OUT2 3
NC 4
GND 5
VS 6
OUT1 7
VREF 8
IN1 9

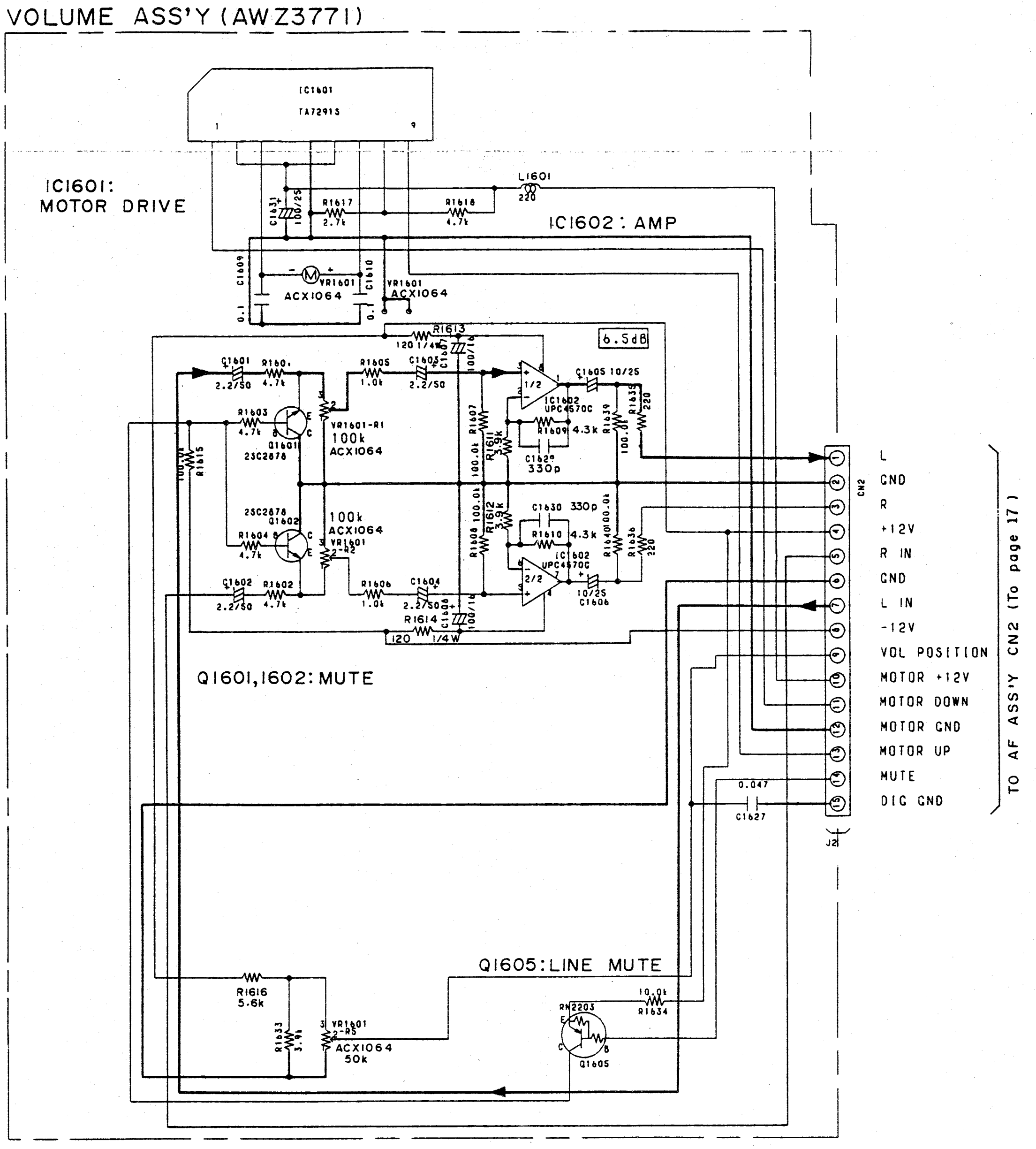
VOLUME ASS'Y (AWZ3771)
IC1601
TA7291S
IC1601: MOTOR DRIVE
L1601 220
C1631 100/25
R1617 2.7k
R1618 4.7k
IC1602: AMP
C1609 0.1
C1610 0.1
M
VR1601 ACX1064
6.5dB
R1613 120 1/4W
C1607 100/16
C1601 2.2/50
R1601 4.7k
R1605 1.0k
C1603 2.2/50
C1605 10/25
1/2
IC1602 UPC4570C
R1609 4.3k
R1639 100.0k
R1635 220
R1603 4.7k
Q1601 2SC2878
VR1601-R1 100k ACX1064
R1607 100.0k
R1611 3.9k
C1629 330p
R1615 100.0k
2SC2878 Q1602
100k ACX1064 VR1601 -R2
R1604 4.7k
R1608 100.0k
R1612 3.9k
C1630 330p
R1610 4.3k
R1640 100.0k
R1636 220
2/2
C1602 2.2/50
R1602 4.7k
R1606 1.0k
C1604 2.2/50
R1614 120 1/4W
C1608 100/16
C1606 10/25
Q1601,1602: MUTE
CN2
1 L
2 GND
3 R
4 +12V
5 R IN
6 GND
7 L IN
8 -12V
9 VOL POSITION
10 MOTOR +12V
11 MOTOR DOWN
12 MOTOR GND
13 MOTOR UP
14 MUTE
15 DIG GND
0.047
C1627
J21
TO AF ASS'Y CN2 (To page 17)
Q1605: LINE MUTE
R1616 5.6k
R1633 3.9k
VR1601 -R3 ACX1064 50k
RN2203
Q1605
10.0k
R1634

AF AND FUSE ASSY

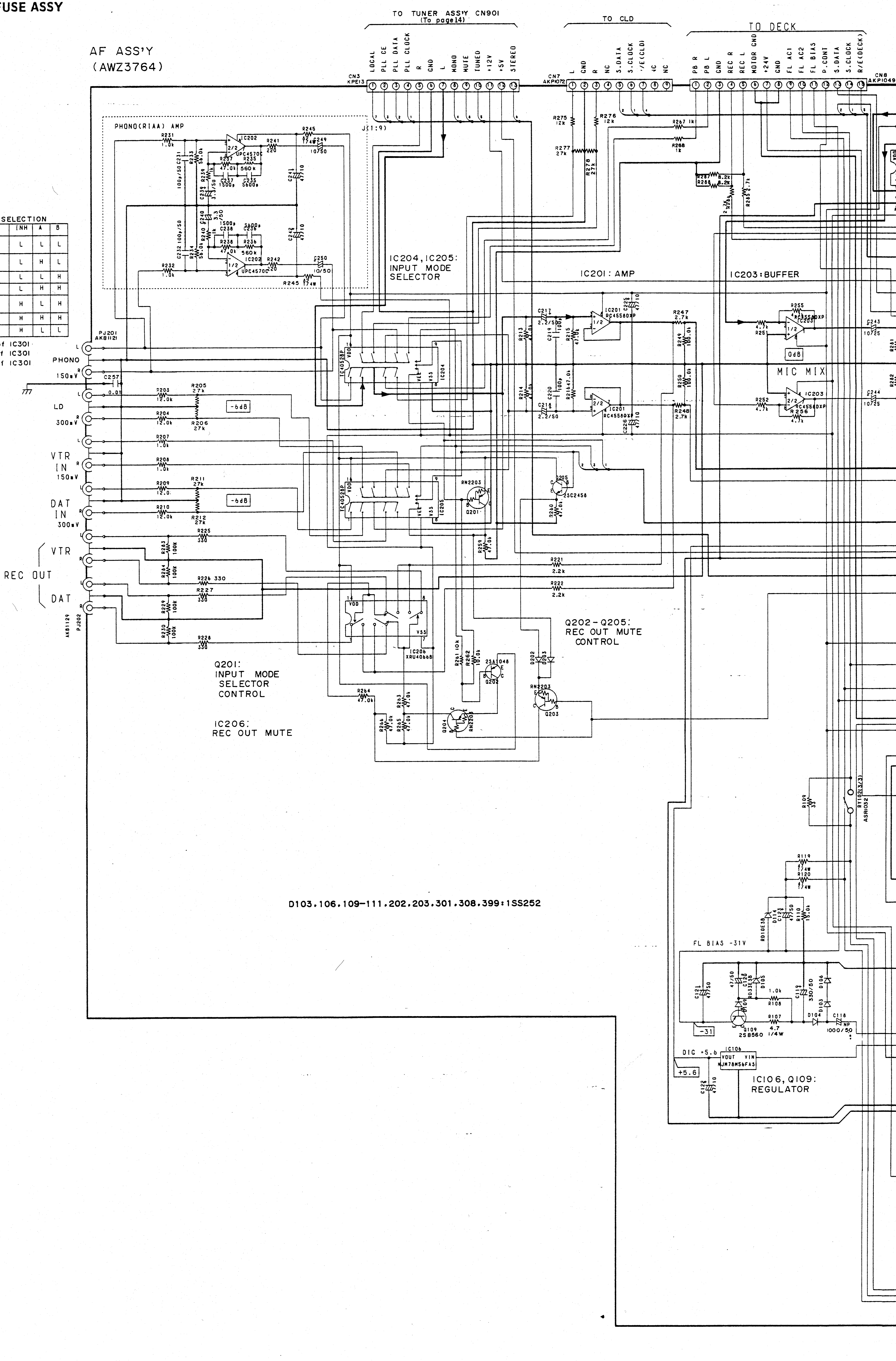
AF ASS'Y
(AWZ3764)
TO TUNER ASS'Y CN901
(To page14)
CN3 KPE13
LOCAL
PLL CE
PLL DATA
PLL CLOCK
R
GND
L
MONO
MUTE
TUNED
+12V
+5V
STEREO
TO CLD
CN7 AKP1072
L
GND
R
NC
S.DATA
S.CLOCK
R/E(CLD)
NC
NC
TO DECK
CN8 AKP1049
PB R
PB L
GND
REC R
REC L
MOTOR GND
+24V
GND
FL AC1
FL AC2
FL BIAS
P.CONT
S.DATA
S.CLOCK
R/E(DECK)
PHONO(RIAA) AMP
IC202
UPC4570C
IC204,IC205:
INPUT MODE
SELECTOR
IC201: AMP
RC4558DXP
IC203: BUFFER
MIC MIX
0dB
-6dB
PJ201
AK8121
PHONO
150mV
LD
300mV
VTR
IN
150mV
DAT
IN
300mV
VTR
REC OUT
DAT
AK8112
PJ202
IC4052BP
RN2203
Q201
2SC2458
Q205
IC206
XRU4066B
2SA1048
Q202
Q203
Q204
Q201:
INPUT MODE
SELECTOR
CONTROL
IC206:
REC OUT MUTE
Q202-Q205:
REC OUT MUTE
CONTROL
D103.106.109-111.202.203.301.308.399:1SS252
FL BIAS -31V
-31
2SB560
Q109
DIG +5.6
+5.6
IC106
VOUT VIN
NJM78M56FA3
IC106, Q109:
REGULATOR
RY102(3/3)
ASR1032
A
B
C
D
E
F

FUNCTION SELECTION

	INH	A	B
PHONO	L	L	L
CLD	L	H	L
TUNER	L	L	H
TAPE	L	H	H
LD	H	L	H
VTR	H	H	H
DAT	H	L	L

A: Pin6 of IC301
B: Pin7 of IC301
INH: Pin8 of IC301

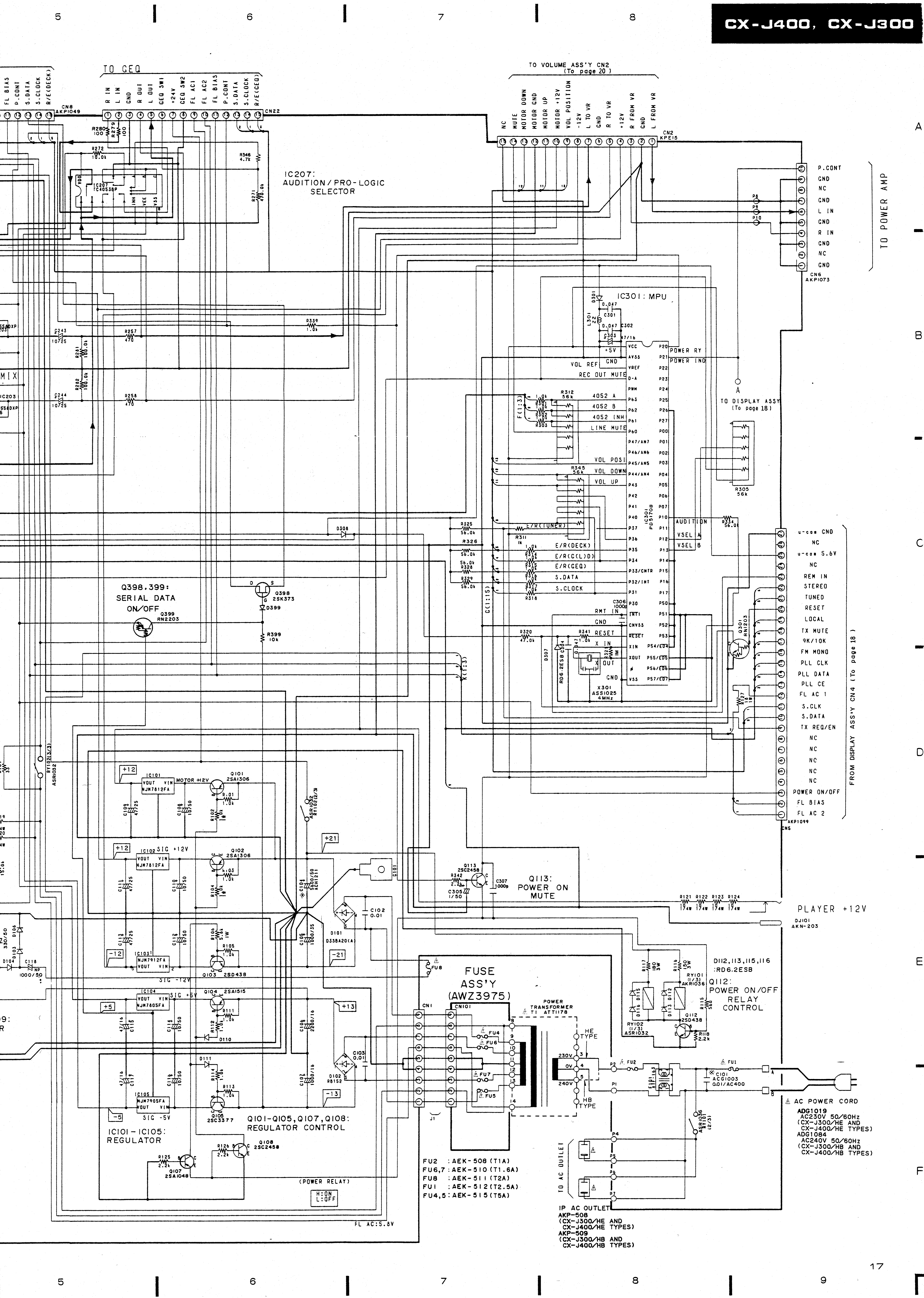
5
6
7
8
9
A
B
C
D
E
F
TO GEQ
CN8 AKP1049
CN22
TO VOLUME ASS'Y CN2 (To page 20)
CN2 KPE15
NC
MUTE
MOTOR DOWN
MOTOR GND
MOTOR UP
MOTOR +12V
VOL POSITION
-12V
L TO VR
GND
R TO VR
+12V
R FROM VR
GND
L FROM VR
R IN
L IN
GND
R OUT
L OUT
GEQ SW1
+24V
GEQ SW2
FL AC1
FL AC2
FL BIAS
P.CONT
S.DATA
S.CLOCK
R/E(GEQ)
R/E(DECK)
IC207: AUDITION/PRO-LOGIC SELECTOR
IC207 TC4053BP
P.CONT
GND
NC
GND
L IN
GND
R IN
GND
NC
GND
CN6 AKP1073
TO POWER AMP
IC301: MPU
IC301 PD5170B
POWER RY
POWER IND
VOL REF
REC OUT MUTE
4052 A
4052 B
4052 INH
LINE MUTE
VOL POSI
VOL DOWN
VOL UP
E/R(TUNER)
E/R(DECK)
E/R(C(L)D)
E/R(GEQ)
S.DATA
S.CLOCK
RMT IN
RESET
X IN
OUT
AUDITION
VSEL A
VSEL B
X301 ASS1025 4MHz
TO DISPLAY ASSY (To page 18)
MIX
Q398,399: SERIAL DATA ON/OFF
Q398 2SK373
Q399 RN2203
D399
R399 10k
u-com GND
NC
u-com 5.6V
NC
REM IN
STEREO
TUNED
RESET
LOCAL
TX MUTE
9K/10K
FM MONO
PLL CLK
PLL DATA
PLL CE
FL AC 1
S.CLK
S.DATA
TX REQ/EN
NC
NC
NC
NC
NC
POWER ON/OFF
FL BIAS
FL AC 2
AKP1099 CN5
FROM DISPLAY ASS'Y CN4 (To page 18)
Q301 RN1203
IC101 NJM7812FA
MOTOR +12V
Q101 2SA1306
IC102 NJM7812FA
SIG +12V
Q102 2SA1306
IC103 NJM7912FA
SIG -12V
Q103 2SD438
IC104 NJM7805FA
SIG +5V
Q104 2SA1515
IC105 NJM7905FA
SIG -5V
Q105 2SC3377
D110
D111
+12
+12
-12
+5
-5
+21
-21
+13
-13
IC101-IC105: REGULATOR
Q101-Q105,Q107,Q108: REGULATOR CONTROL
Q107 2SA1048
Q108 2SC2458
(POWER RELAY)
H:ON L:OFF
FL AC:5.8V
RY102(3/3) ASR1032
RY102(2/3) ASR1032
Q113 2SC2458
Q113: POWER ON MUTE
C307 1000p
D101 D3SBA20(A)
D102 RB152
FUSE ASS'Y (AWZ3975)
CN1
CN101
FU8
FU4
FU6
FU7
FU5
J1
POWER TRANSFORMER T1 ATT1178
HE TYPE
HB TYPE
230V
0V
240V
FU2
FU1
C101 ACG1003 0.01/AC400
PLAYER +12V
DJ101 AKN-203
D112,113,115,116 :RD6.2ESB
Q112: POWER ON/OFF RELAY CONTROL
RY101 (1/3) AKR1036
RY102 (1/3) ASR1032
Q112 2SD438
RY101 (2/3) AKR1036
AC POWER CORD
ADG1019 AC230V 50/60Hz (CX-J300/HE AND CX-J400/HE TYPES)
ADG1084 AC240V 50/60Hz (CX-J300/HB AND CX-J400/HB TYPES)
TO AC OUTLET
IP AC OUTLET AKP-508 (CX-J300/HE AND CX-J400/HE TYPES) AKP-509 (CX-J300/HB AND CX-J400/HB TYPES)
FU2 : AEK-508 (T1A)
FU6,7 : AEK-510 (T1.6A)
FU8 : AEK-511 (T2A)
FU1 : AEK-512 (T2.5A)
FU4,5 : AEK-515 (T5A)

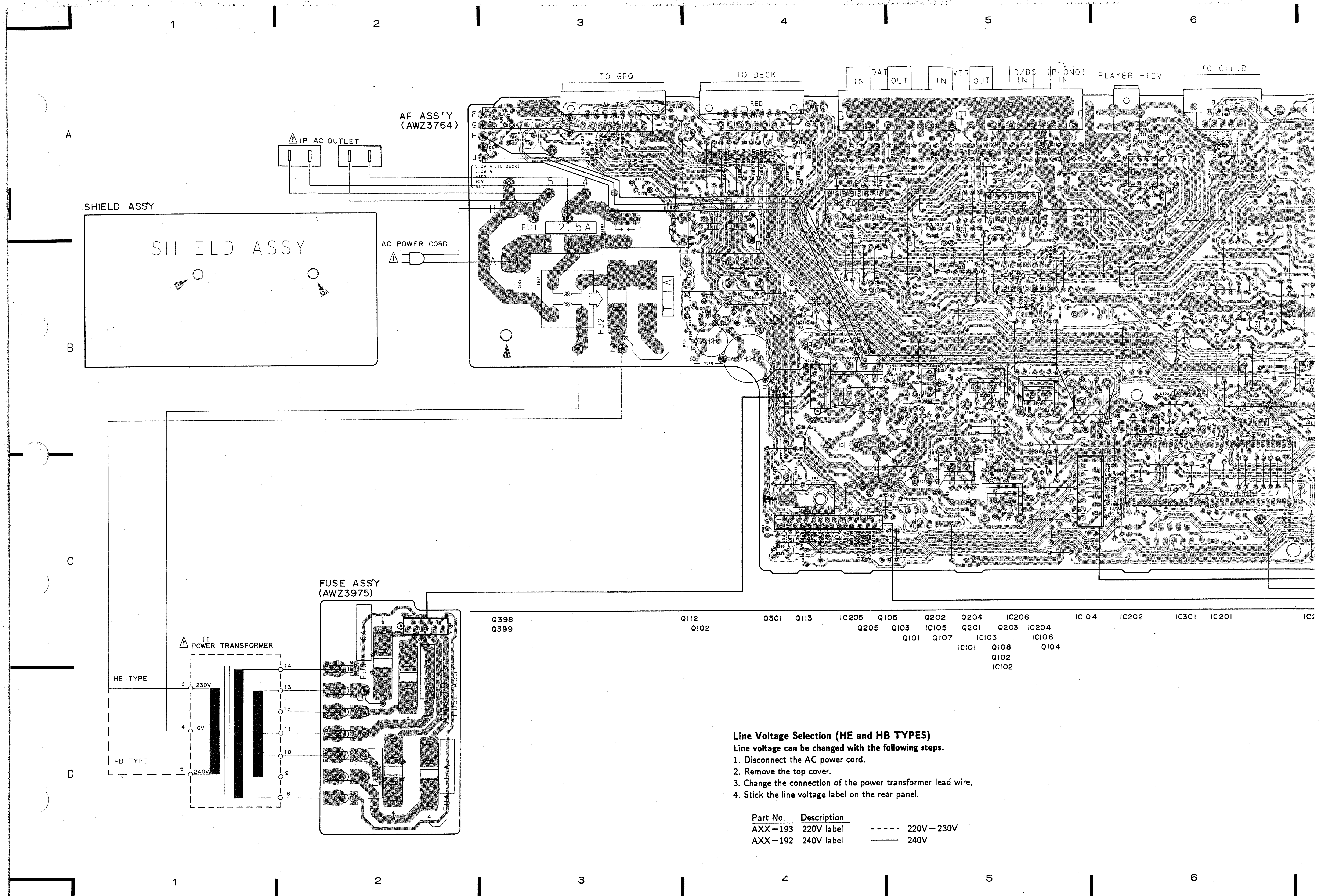
1
2
3
4
5
6
A
B
C
D
TO GEQ
TO DECK
DAT
IN
OUT
VTR
IN
OUT
LD/BS
IN
TV
(PHONO)
IN
PLAYER +12V
TO CIL D
WHITE
RED
BLUE
AF ASS'Y
(AWZ3764)
IP AC OUTLET
SHIELD ASSY
SHIELD ASSY
AC POWER CORD
FU1
T2.5A
FU2
T1A
ANP1527-C
TC4053BP
TC4066
TC4052BP
S.DATA (TO DECK)
S.DATA
-10V
+5V
GND
FUSE ASS'Y
(AWZ3975)
AWZ3975
FUSE ASSY
FU5
T5A
FU7
T1.6A
FU6
T1.6A
FU4
T5A
T1
POWER TRANSFORMER
HE TYPE
HB TYPE
230V
0V
240V
Q398
Q399
Q112
Q102
Q301
Q113
IC205
Q205
Q105
Q103
Q101
Q202
IC105
Q107
Q204
Q201
IC103
IC101
Q108
Q102
IC102
IC206
Q203
IC204
IC106
Q104
IC104
IC202
IC301
IC201

Line Voltage Selection (HE and HB TYPES)

Line voltage can be changed with the following steps.

1. Disconnect the AC power cord.
2. Remove the top cover.
3. Change the connection of the power transformer lead wire.
4. Stick the line voltage label on the rear panel.

Part No.	Description		
AXX−193	220V label	- - - -	220V−230V
AXX−192	240V label	——	240V

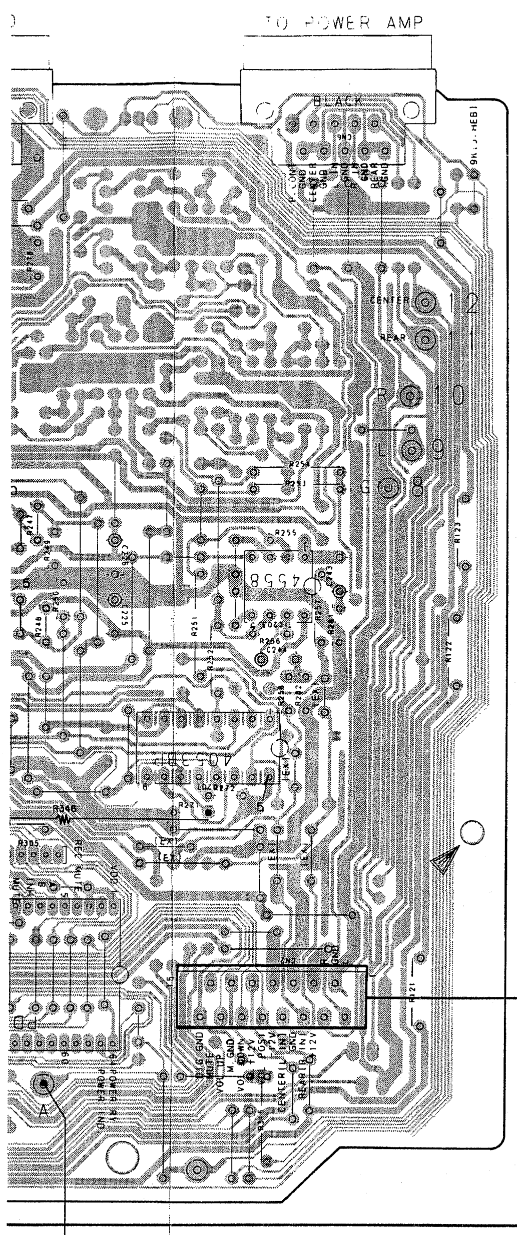
TO POWER AMP
BLACK
CENTER
REAR
A

IC207 IC203

VOLUME ASS'Y(AWZ3771)

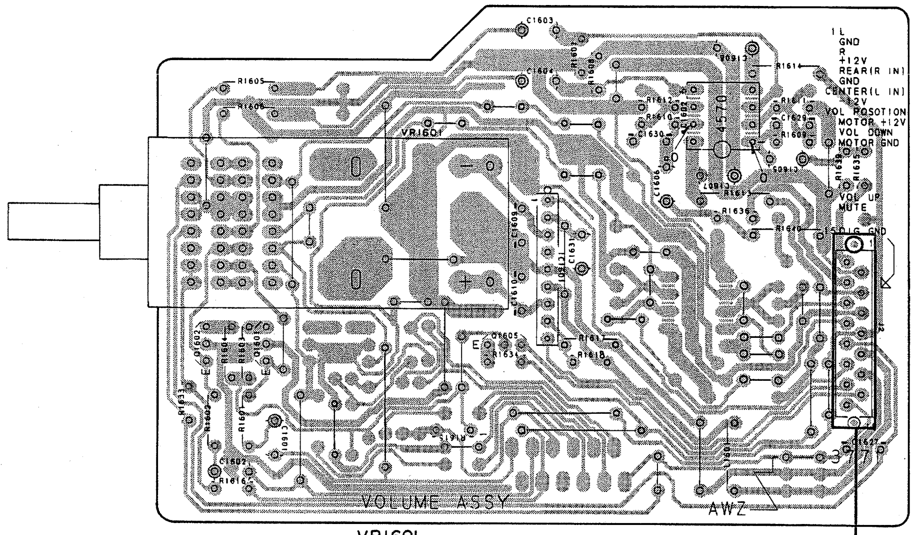
L
GND
R
+12V
REAR(R IN)
GND
CENTER(L IN)
-12V
VOL POSOTION
MOTOR +12V
VOL DOWN
MOTOR GND
VOL UP
MUTE
VOLUME ASSY
AWZ

VR1601

Q1602 Q1601 Q1605 IC1601 IC1602

TUNER ASS'Y(AWE1230)

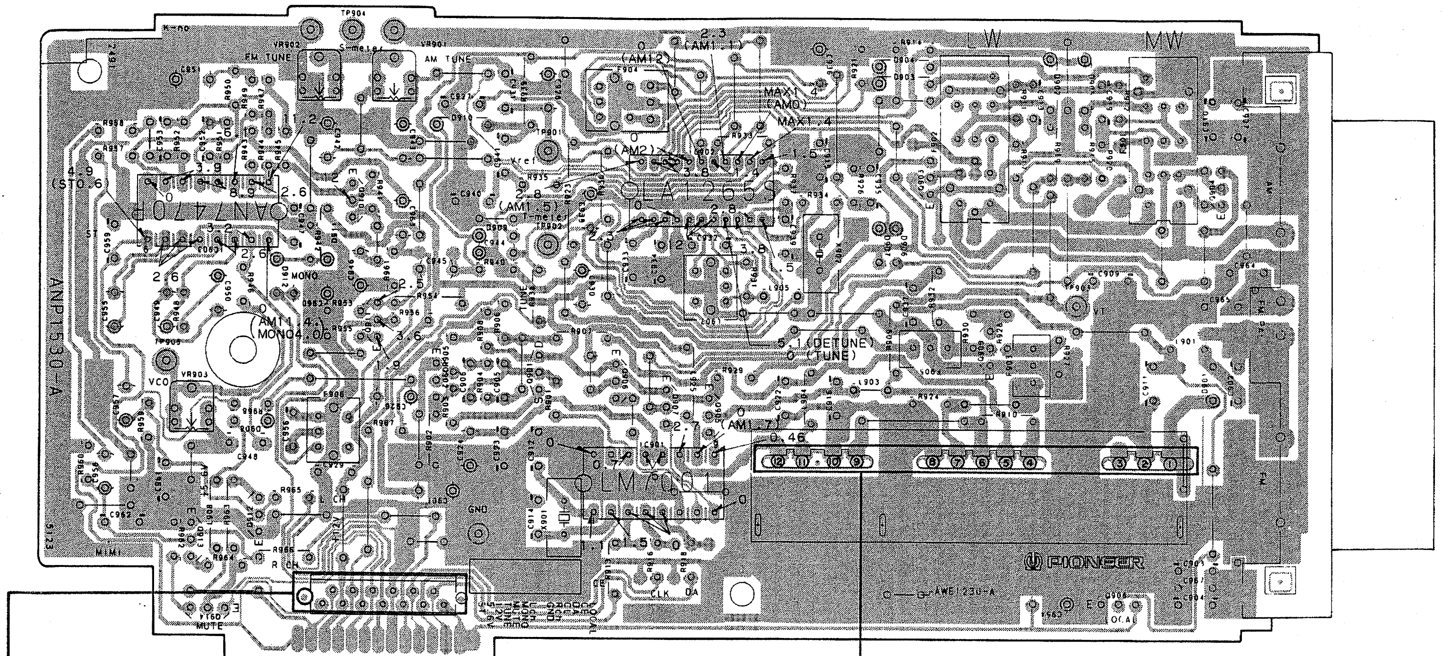
ANP1530-A
AWE1230-A
PIONEER
LW
MW
MUTE
GND

VR903 VR902 VR901

IC903 Q910 Q902 Q901 Q906 Q907 Q905 Q903 Q909 Q908 Q904
Q913 Q912 Q911 IC902
Q914 IC901

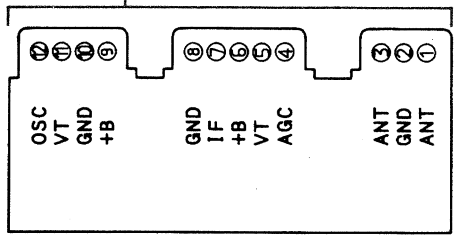
OSC
VT
GND
+B
GND
IF
+B
VT
AGC
ANT
GND
ANT

FE MODULE ASS'Y
(AXQ1002)

DISPLAY ASS'Y(AWZ3769)

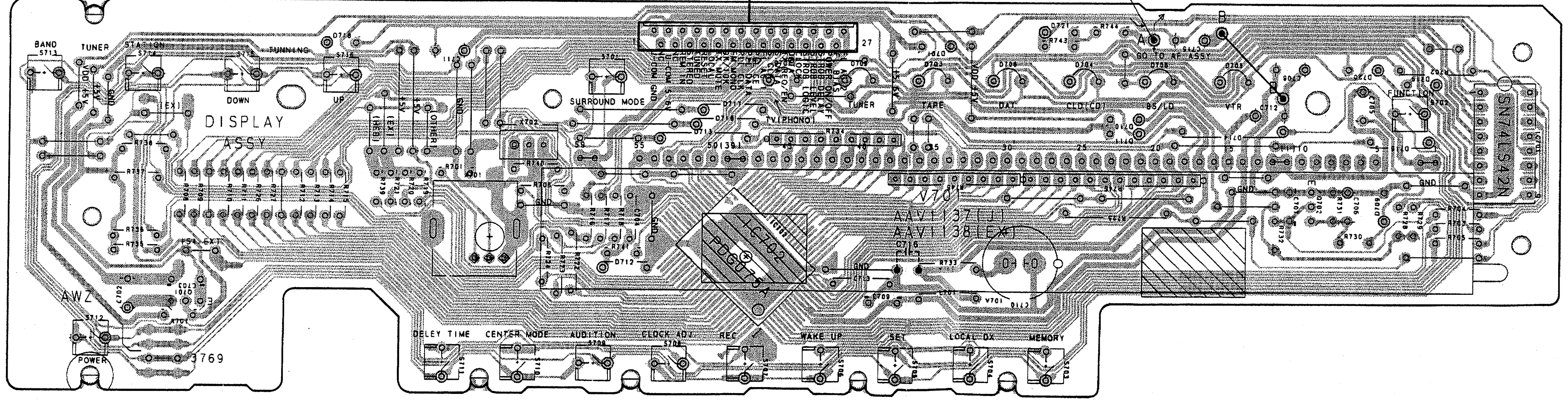
BAND
TUNER
TUNNING
DOWN
UP
DISPLAY ASSY
SURROUND MODE
TUNER
TAPE
DAT
CD
BS/LD
VTR
FUNCTION
DELEY TIME
CENTER MODE
AUDITION
CLOCK ADJ
REC
WAKE UP
SET
LOCAL DX
MEMORY
POWER
AWZ
3769
IC702
AAV1137(J)
AAV1138(EX)
SN74LS42N
GO TO AF ASSY

Q701 IC702 Q702 IC701

NOTE

1. This P.C.B connection diagram is viewed from the parts mounted side.
2. The parts which have been mounted on the board can be replaced with those shown with the corresponding wirng symbols listed in the following Table.

P.C.B. pattern diagram indication	Corresponding part symbol	Part Name
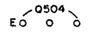	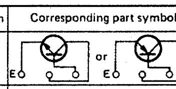	Transistor
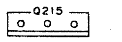	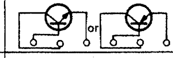	Radiator type transistor
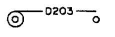	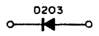	Diode
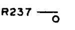		Resistor
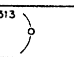	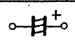	Capacitor (Polarity)
	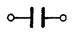	Capacitor (Non-polarity)

Others

P.C.B. pattern diagram indication	Part Name
IC	IC
S	Switch
RY	Relay
L	Coil
F	Filter
VR	Variable resistor or Semi-fixed resistor

3. The capacitor terminal marked with ◎ (double circles) shows negative terminal.
4. The diode terminal marked with ◎ (double circles) shows cathode side.
5. The transistor terminal to which E is affixed shows the emitter.

CX-J400, CX-J300

This P.C.B. connection diagram is viewed from the foil side.

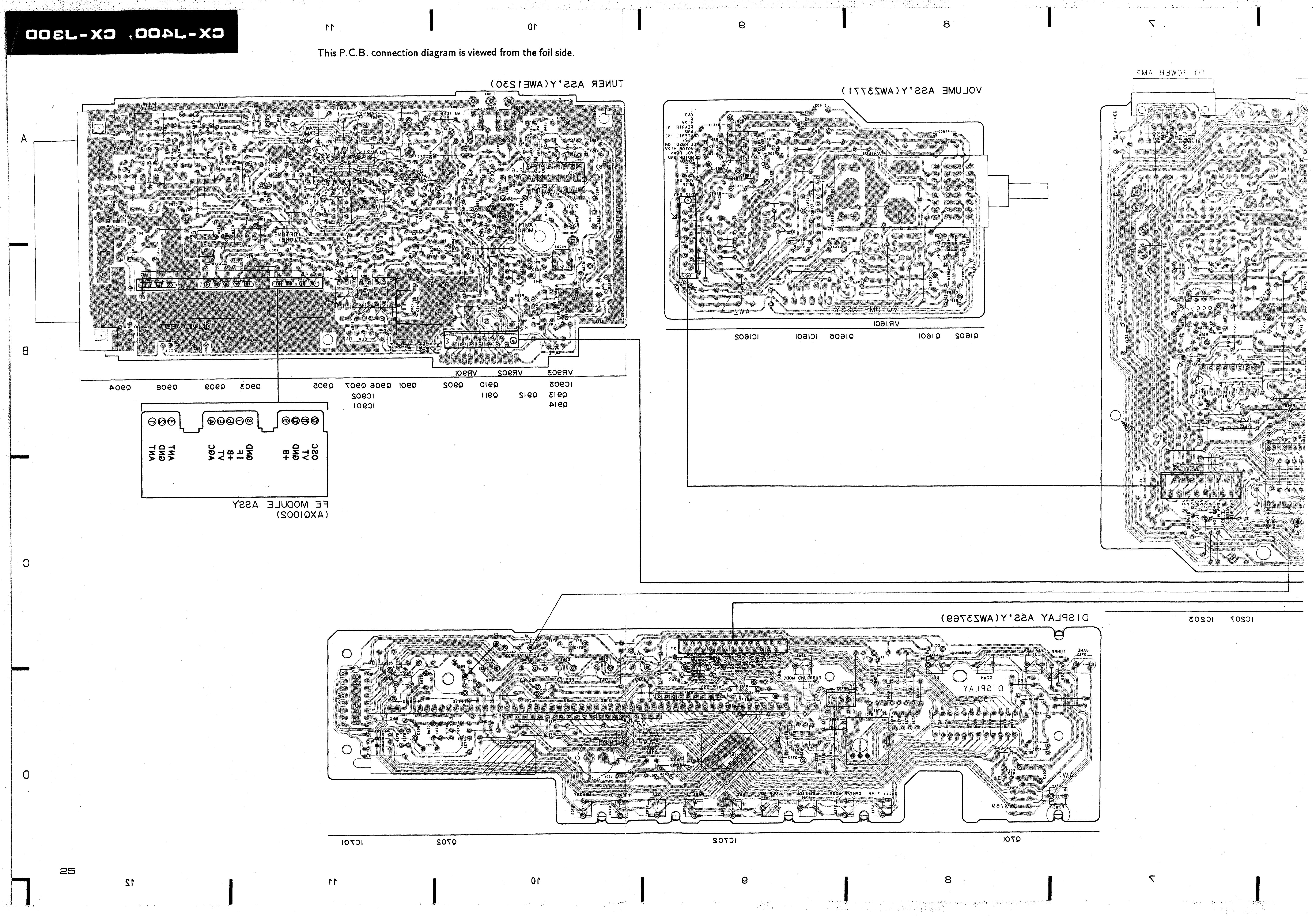
7
8
9
10
11
12
A
B
C
D
TUNER ASS'Y(AWE1230)
VOLUME ASS'Y(AWZ3771)
TO POWER AMP
BLACK
VR1601
Q1602 Q1601 Q1605 IC1601 IC1602
VR903 VR902 VR901
IC903 Q910 Q902 Q901 Q906 Q907 Q905 Q903 Q909 Q908 Q904
Q913 Q911 Q912 IC902
Q914 IC901
FE MODULE ASSY
(AXQ1002)
+B
GND
VT
OSC
AGC
VT
B+
IF
GND
ANT
GND
ANT
DISPLAY ASS'Y(AWZ3769)
IC207 IC203
IC701 Q702 IC702 Q701
PIONEER

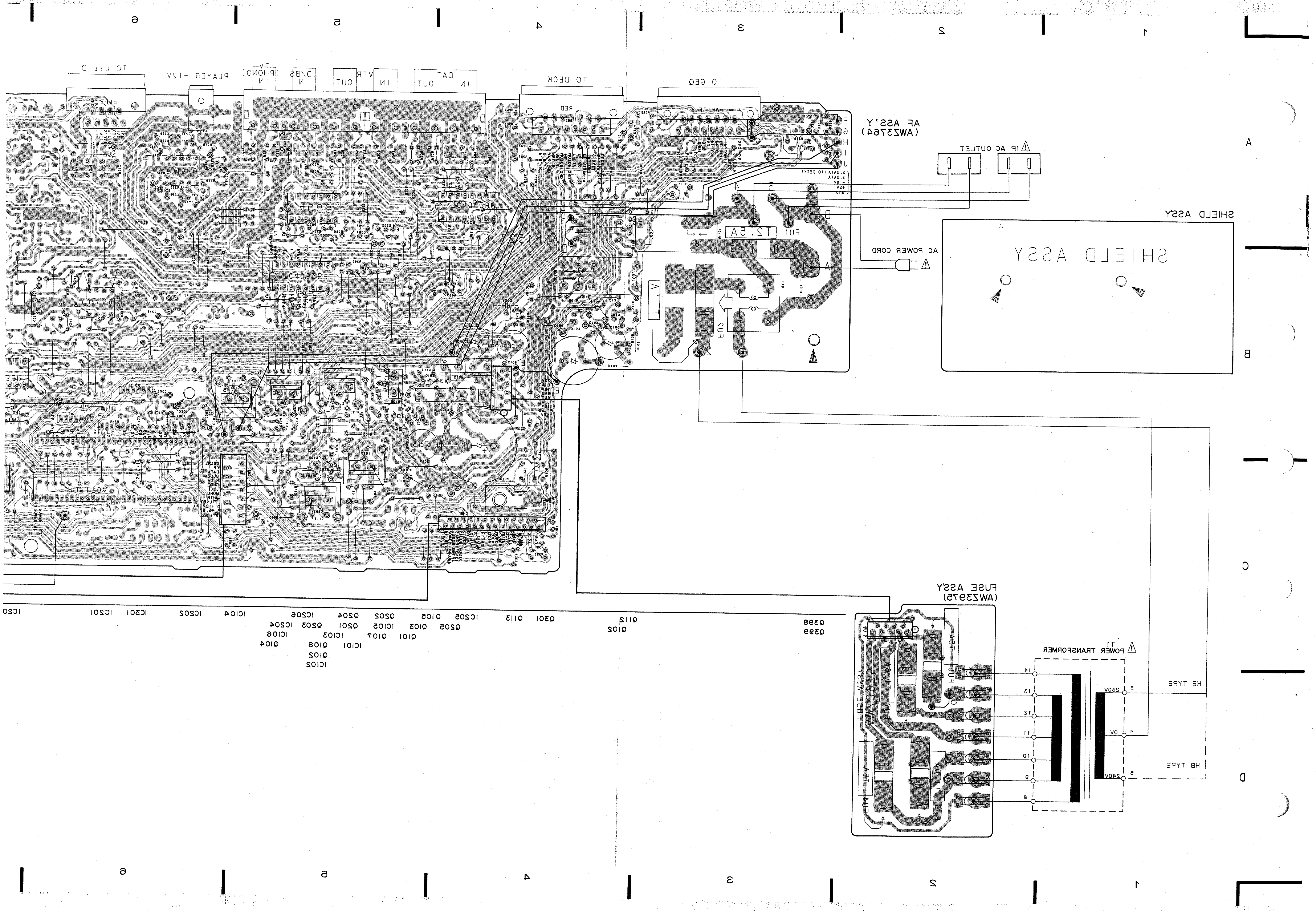
AF ASS'Y
(AWZ3764)
SHIELD ASSY
FUSE ASS'Y
(AWZ3975)
T1
POWER TRANSFORMER
HE TYPE
HB TYPE
230V
0V
240V
AC POWER CORD
AC OUTLET
TO DECK
TO GEQ
TO CD
PLAYER +12V
TV (PHONO) IN
LD/BS IN
VTR OUT IN
DAT OUT IN
RED
WHITE
BLUE
S.DATA (TO DECK)
S.DATA
-10V
+5V
T2.5A
FU1
FU2
T1A
IC20
IC201
IC301
IC202
IC104
IC206
IC204
IC106
Q104
IC205
Q205
Q113
Q301
Q112
Q102
Q398
Q399
Q105
Q103
Q101
Q202
IC105
Q107
Q204
Q201
IC103
IC101
Q203
Q108
Q102
IC102
1
2
3
4
5
6
A
B
C
D

6. ADJUSTMENTS

- As to connections and points to be adjusted, refer to Fig. 6-1, Fig. 6-2 and Fig. 6-3.

6.1 AM TUNER ADJUSTMENT

- Set the BAND selector to "AM".

Step No.	Adjustment Title	AM SG(400Hz, 30% modulation)		Reception Frequency Display	Adjustment	
		Frequency(kHz)	Level(dBμV/m)		Adjustment Location	Specifications
1	TUNED indicator sensitivity adjustment	999	55±5	999kHz	VR901	Adjust so that the indicator lights up.

6.2 FM TUNER ADJUSTMENT

- Set the BAND selector to "FM".
- Perform VCO adjustment two minutes or more after turning the power ON.

Note : Stereo modulation : Main 1 kHz L + R ± 68.25 Hz dev.
Pilot 19 kHz ± 6.75 kHz dev .

Step No.	Adjustment Title	FM SG(1kHz±75kHz dev.)		Reception Frequency Display	Adjustment	
		Frequency(MHz)	Level(dBμV)		Adjustment Location	Specifications
1	Detector coil T-meter adjustment	98.0	80	98.0MHz	L907	Adjust so that the DC voltage between TP901 and TP902 is ± 50mV.
2	VCO adjustment	98.0 (No modulation)	80	98.0MHz	VR903	Adjust so that the frequency between TP905 and GND is 76 ± 0.5kHz
3	TUNED indicator sensitivity adjustment	98.0	18 ± 3	98.0MHz	VR902	Adjust so that the indicator lights up.

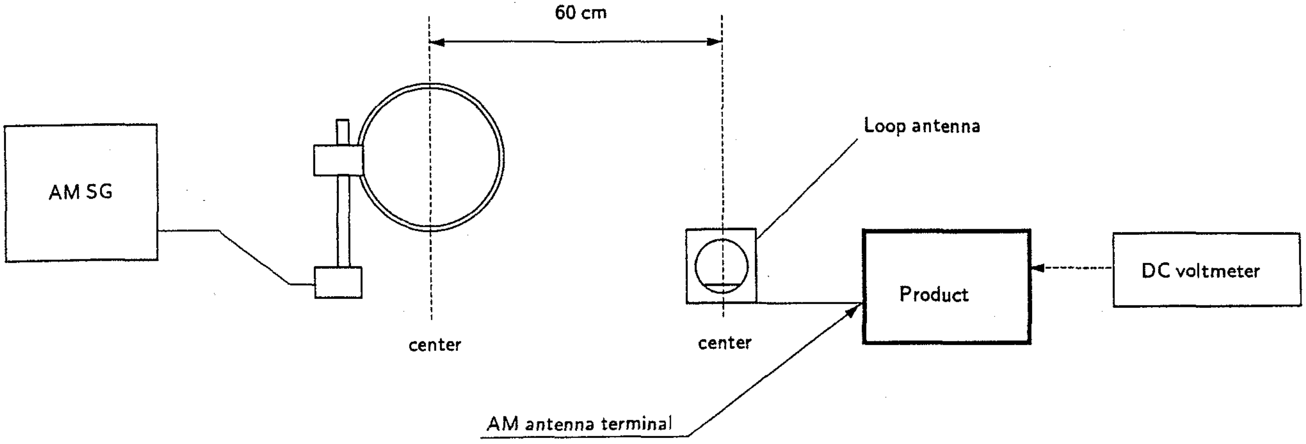
60 cm
Loop antenna
AM SG
DC voltmeter
Product
center
center
AM antenna terminal

Fig. 6-1 AM Adjustment Connection Diagram

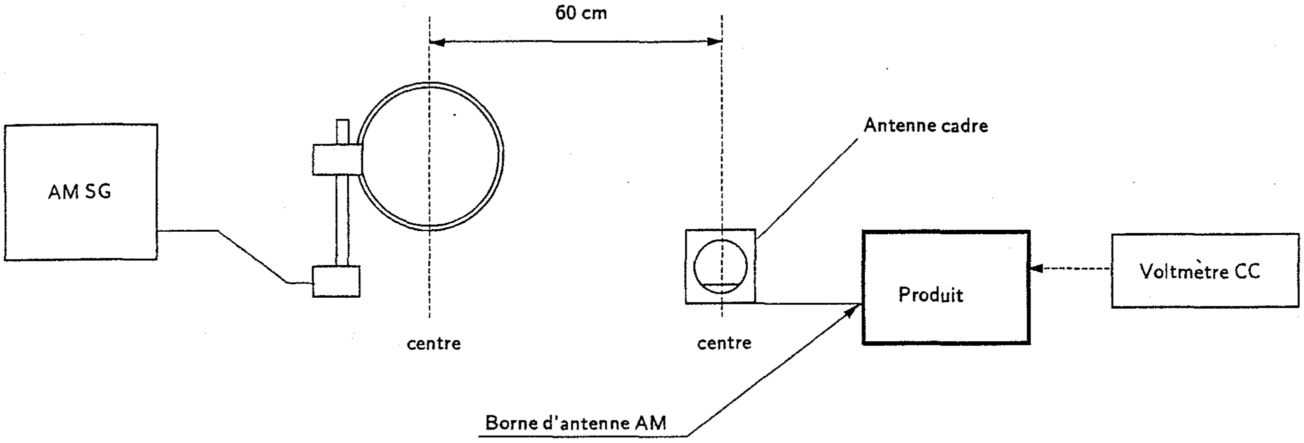
60 cm
Antenne cadre
AM SG
Voltmètre CC
Produit
centre
centre
Borne d'antenne AM

Fig. 6-1 Schéma de raccordement de réglage AM

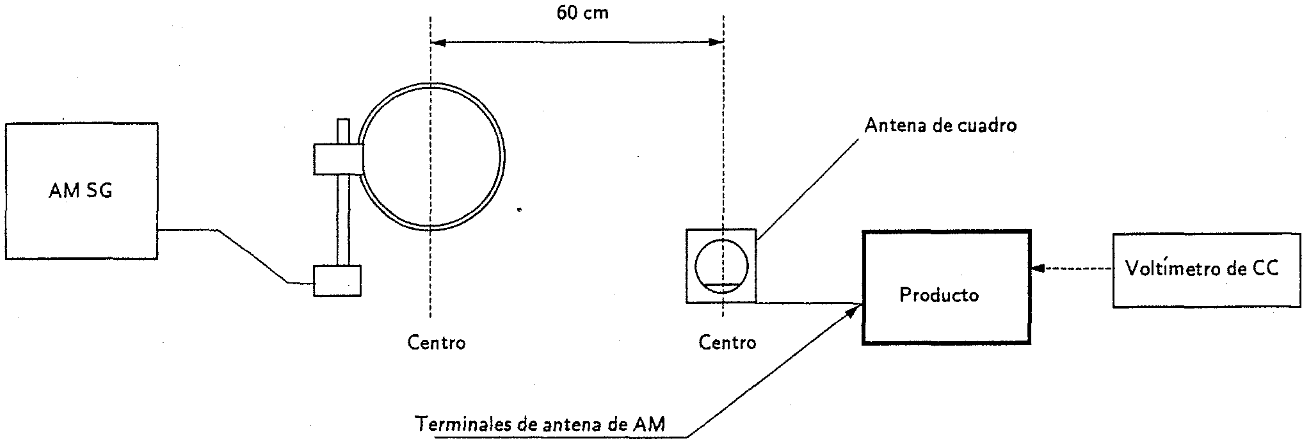
60 cm
Antena de cuadro
AM SG
Voltímetro de CC
Producto
Centro
Centro
Terminales de antena de AM

Fig. 6-1 Diagrama de conexiones para el ajuste de AM

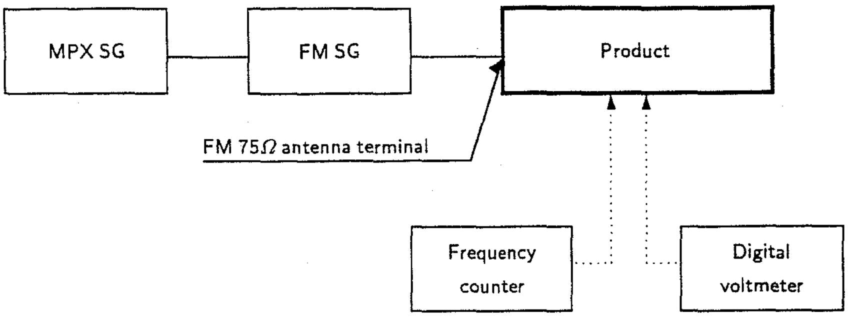
MPX SG
FM SG
Product
FM 75Ω antenna terminal
Frequency counter
Digital voltmeter

Fig. 6-2 FM Adjustment Connection Diagram

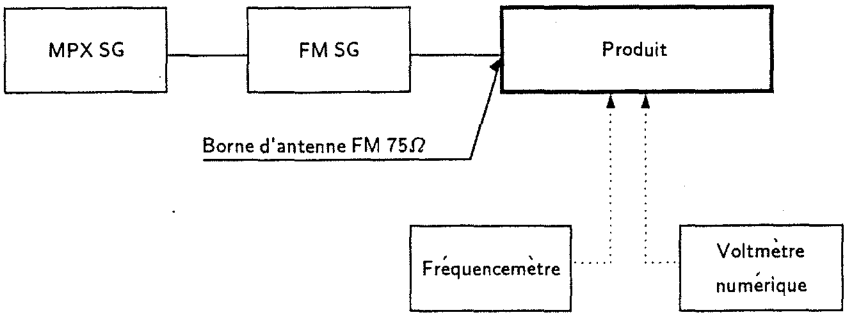
MPX SG
FM SG
Produit
Borne d'antenne FM 75Ω
Fréquencemètre
Voltmètre numérique

Fig. 6-2 Schéma de connexion de réglage FM

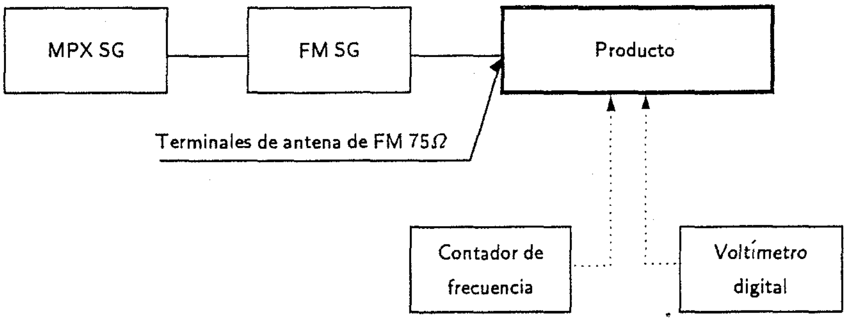
MPX SG
FM SG
Producto
Terminales de antena de FM 75Ω
Contador de frecuencia
Voltímetro digital

Fig. 6-2 Diagrama de conexiones para el ajuste de FM

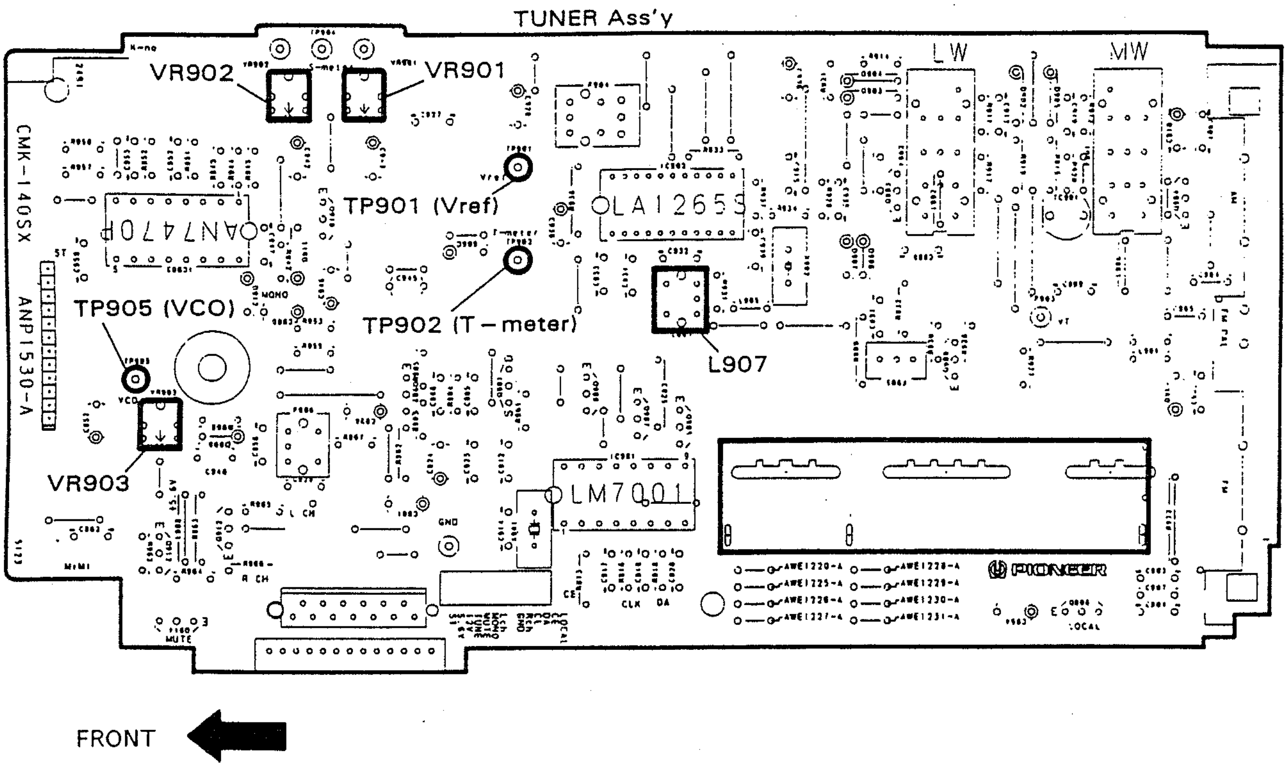
TUNER Ass'y
VR902
VR901
TP901 (Vref)
TP902 (T – meter)
TP905 (VCO)
VR903
L907
LW
MW
LA1265S
AN7470P
LM7001
CMK-140SX
ANP1530-A
MONO
GND
CLK
DA
CE
R CH
L CH
MUTE
LOCAL
PIONEER
FRONT

Fig. 6-3 Adjustment Points

Fig. 6-3 Emplacements de réglage

Fig. 6-3 Puntos de ajuste

7. FOR CX–J400/HB ; CX–J300/HE AND HB

NOTES :

- *Parts without part number cannot be supplied.*
- *Parts marked by "◉" are not always kept in stock. Their delivery time may be longer than usual or they may be unavailable.*
- *The ⚠ mark found on some component parts indicates the importance of the safety factor of the part. Therefore, when replacing, be sure to use parts of identical designation.*

CONTRAST OF MISCELLANEOUS PARTS

CX-J400/HB ; CX-J300/HE, HB and CX-J400/HE have the same construction except for the following :

Mark	Symbol & Description	Part No.				Remarks
		CX-J400/ HE type	CX-J400/ HB type	CX-J300/ HE type	CX-J300/ HB type	
⚠	AC power cord	ADG1019	ADG1084	ADG1019	ADG1084	
⚠	AC outlet 1P	AKP-508	AKP-509	AKP-508	AKP-509	
	Front panel	AMB1899	AMB1899	AMB1898	AMB1898	
	Leg assembly	RXA1448	RXA1447	RXA1277	RXA1277	
	Packing case	AHD2184	AHD2184	AHD2185	AHD2185	For packing